Back

FURUNO

INSTALLATION MANUAL

COLOR GPS/PLOTTER/SOUNDER
COLOR DGPS/PLOTTER/SOUNDER

GP-1850WF
MODEL GP-1850WDF

FURUNO ELECTRIC CO., LTD.
NISHINOMIYA, JAPAN

PRINTED IN JAPAN

ECF
(Elemental Chlorine Free)
The paper used in this manual is elemental chlorine free.

© FURUNO ELECTRIC CO., LTD.

9-52 Ashihara-cho,
Nishinomiya 662-8580, JAPAN

Telephone : 0798-65-2111
Fax : 0798-65-4200

FURUNO Authorized Distributor/Dealer

All rights reserved. Printed in Japan

FIRST EDITION :AUG. 2002
A4 : SEP. 09, 2005

Pub. No. IME-44252-A4

(DAMI) GP-1850WF/1850WDF

00080937200

IME44252A40

⚠ SAFETY INSTRUCTIONS

Safety Instructions for the Installer

⚠ WARNING

Do not work inside the equipment unless totally familiar with electrical circuits.

Hazardous voltage which can shock, burn or cause serious injury exists inside the equipment.

Turn off the power at the mains switchboard before beginning the installation. Post a sign near the switch to indicate it should not be turned on while the equipment is being installed.

Fire, electrical shock or serious injury can result if the power is left on or is applied while the equipment is being

⚠ CAUTION

Ground the equipment to prevent electrical shock and mutual interference.

Confirm that the power supply voltage is compatible with the voltage rating of the equipment.

Connection to the wrong power supply can cause fire or equipment damage. The voltage rating appears on the label at the rear of the display unit.

Use the correct fuse.

Use of a wrong fuse can cause fire or equipment damage.

Keep the following compass safe distance.

	Standard	Steering
Display unit	0.5 m	0.3 m

⚠ CAUTION

When handling the transducer cable, keep in mind the following points.
- **Keep the cable away from oil and fuel.**
- **Keep the cable away from the place where it may be damaged during the installation.**
- **Do not paint the cable.**

The sheath of the transducer cable is made of chlonophrene rubber (or vinil chloride). Therefore, do not paint the seath with organic liquid (such as toluene) since it may harm the seath.

TABLE OF CONTENTS

SYSTEM CONFIGURATION.. **iii**

EQUIPMENT LISTS.. **iv**

1. INSTALLATION.. **1-1**
1.1 Installation of Display Unit.. 1-1
1.2 Installation of Antenna Unit.. 1-3
1.3 Installation of Transducers.. 1-4
1.4 Installation of Sensors.. 1-20

2. WIRING.. **2-1**

3. INITIAL SETTINGS.. **3-1**
3.1 NMEA Setting.. 3-1
3.2 Output Data Sentences.. 3-3
3.3 Antenna Height.. 3-4
3.4 DGPS Setting.. 3-5
3.5 External Equipment Setup (Option).. 3-7
3.6 Selecting the Echo Sounder Output Power.. 3-9

4. INCORPORATION OF DGPS BEACON RECEIVER KIT (for GP-1850WF).. **4-1**

PACKING LISTS.. **A-1**
OUTLINE DRAWINGS.. **D-1**
INTERCONNECTION DIAGRAM.. **S-1**

SYSTEM CONFIGURATION

The GP-1850WF/1850WDF mainly consists of a display unit, a GPS antenna and a dual frequency transducer. A DGPS beacon receiver is provided inside the display unit for GP-1850WDF type. The mini chart card drive in the display unit loads electronic charts. External equipment which can be connected include water temperature and speed sensors, autopilot, and DGPS beacon receiver (GP-1850WF).

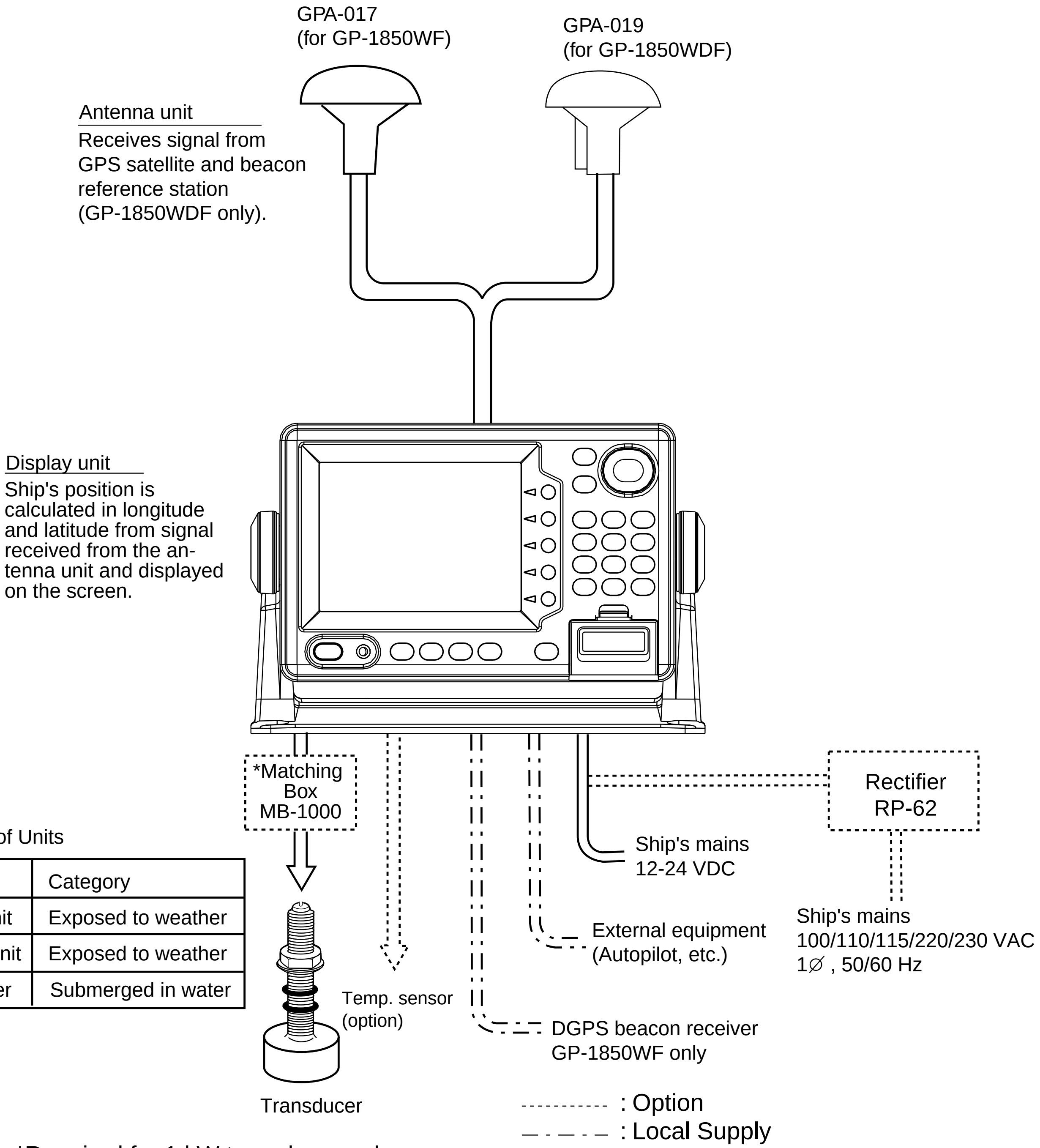

Category of Units

Unit	Category
Display unit	Exposed to weather
Antenna unit	Exposed to weather
Transducer	Submerged in water

*Required for 1 kW transducer only

EQUIPMENT LISTS

Standard supply

Name	Type	Code No.	Qty	Remarks
Display Unit	GP-1850WF-E	-	1	
	GP-1850WDF-E	-		
Antenna Unit	GPA-017	-	1	for GP-1850WF
	GPA-019	-		for GP-1850WDF
Spare Parts*	SP14-02501	004-375-260	1	Fuse
Installation Materials*	CP14-05200	000-041-496	1	Power cable, Cable assy.
Accessories*	FP14-02400	000-041-497	1	FP14-02401, FP14-02402

*: Refer to Packing list at the end of this manual.

Optional equipment

Name	Type	Code No.	Remarks
DGPS Beacon Receiver Kit	GR-7000A-1650-10N-019	000-041-650	GPA-019, GR-7000A
	GR-7000A-1650-15N-019S	000-041-653	GPA-019S, GR-7000A
Antenna cable assy.	TNC-PS-3D-15	000-133-670	15 m, for antenna cable extension
Antenna cable Set	CP20-01700	004-372-110	8D-FB-CV *30M* and CP20-01701, for antenna cable extension
	CP20-01710	004-372-120	8D-FB-CV *50M* and CP20-01701, for antenna cable extension
Cable Assy.	MJ-A7SPF0003-050	000-136-730-01	
Mast mount fixture	CP20-0111	004-365-780	
Right-angle antenna base	No.13-QA330	000-803-239	for antenna unit mounting
L-angle antenna base	No.13-QA310	000-803-240	
Antenna base for rail mounting	No.13-RC5160	000-806-114	
Antenna Unit	GPA-019S	-	for GP-1850WDF
	GPA-017S	-	for GP-1850WF

Optional equipment (con’t)

Name	Type	Code No.	Remarks
Transducer	520-5PSD	000-015-204	for 600 W
	520-5PWD	000-015-126	w/8 m cable transom mount, for 600 W
	520-5MSD	000-015-212	w/8 m cable and water proof connector, for 600 W
	50/200-1T	000-015-170	for 1 kW
Cable assy	02S4092	000-134-484	for 1 kW transducer connection
Matching box	MB-1000	000-040-809	for 1 kW transducer connection
ST sensor	ST-02MSB	000-137-986	Thru-hull type
	ST-02PSB	000-137-987	w/8 m cable, thru-hull type
Inner hull kit S	22S0191	000-802-598	for mounting transducer
Temperature sensor	T-02MTB	000-040-026	
	T-02MSB	000-040-040	
	T-03MSB	000-040-027	
Triducer	525ST-MSD	000-015-263	for 600 W
	525ST-PWD	000-015-261	
Rectifier	PR-62	000-013-484	for 100 VAC
		000-013-485	for 110 VAC
		000-013-486	for 220 VAC
		000-013-487	for 230 VAC
Cable assy.	MJ-A6SPF0011-050	000-132-244	for radar, 6P-4P, 5 m
	MJ-A6SPF0011-100	000-132-336	for radar, 6P-4P, 10 m
	MJ-A6SPF0012-050	000-134-424	for navaid or E/S, 6P-6P, 5 m
	MJ-A6SPF0012-100	000-133-817	for navaid or E/S, 6P-6P, 10 m
Remote controller	RMC-185F-E	004-375-320	Controller, vinyl cover, battery
RAM Card	00RAM02MC-004	004-371-790	2MB
C-MAP modification kit	1650/1850-MAP	004-376-420	

This page is intentionally left blank.

1. INSTALLATION

1.1 Installation of Display Unit

Mounting considerations

The display unit can be installed on a tabletop, on the overhead or flush mounted in a console or panel.

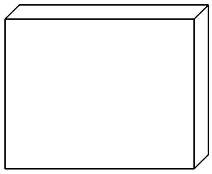
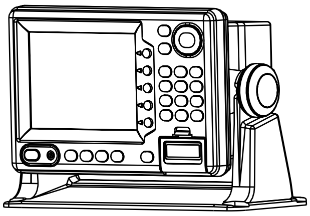
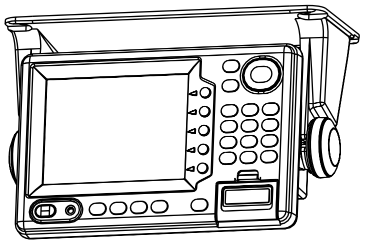

Hard Cover Tabletop Overhead

Tabletop, overhead mounting methods

When selecting a mounting location for the display unit keep the following in mind:

- Keep the display unit out of direct sunlight.
- The temperature and humidity should be moderate and stable.
- Locate the unit away from exhaust pipes and vents.
- The mounting location should be well ventilated.
- Mount the unit where shock and vibration are minimal.
- Keep the unit away electromagnetic field generating equipment such as motor, generator.
- For maintenance and checking purposes, leave sufficient space at the sides and rear of the unit and leave slack in cables.
- A magnetic compass will be affected if placed too close to the display unit. Observe the following compass safe distances to prevent disturbance to the magnetic compass:

  Standard compass: 0.5 meters
  Steering compass: 0.3 meters

- Rubber feet (supplied) which absorb vibration may be attached as below if vibration is a problem. Note however that the display unit can only be tilted within 10° from vertical position when the rubber feet are used.

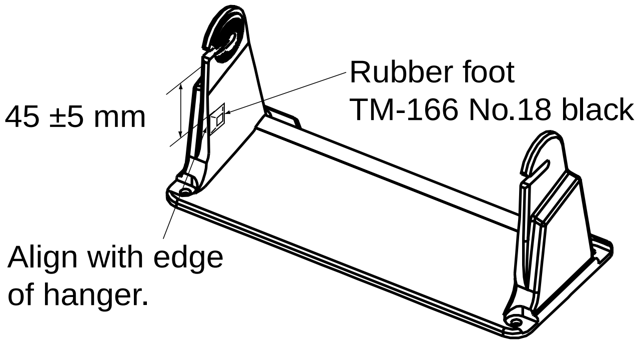

Mounting procedure

Follow the procedure below to mount the display unit on a tabletop or the overhead.

Tabletop, overhead mounting

1. Fix the hanger by four tapping screws 5 X 16.
2. Screw knob bolts in display unit, set it to hanger, and tighten knob bolts.
3. Attach hard cover to protect LCD.

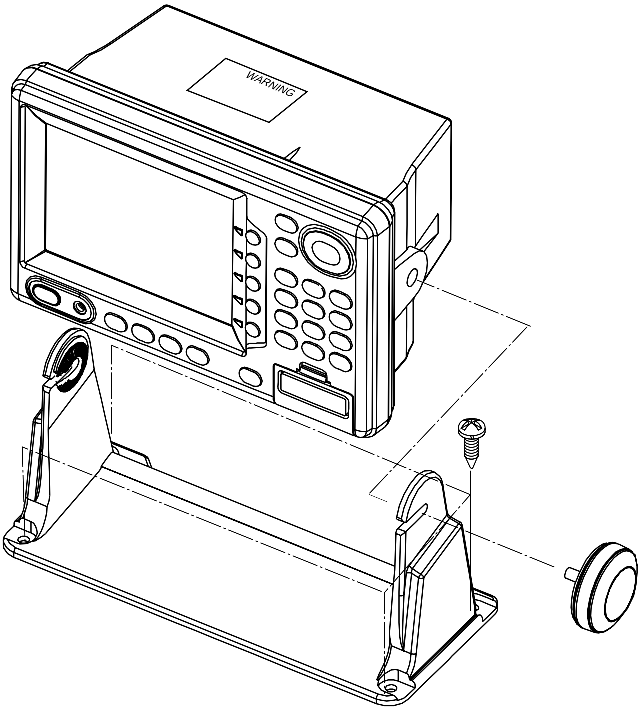

Tabletop, overhead mounting of display unit

Flush mounting

Note: Use supplied pan head screws when the thickness of the bulkhead is from 11 to 14 mm. For bulkhead which exceeds 14 mm in thickness the length of the pan head screws should be bulkhead thickness plus 7.3±1.5 mm. Also the length of B below should max. 7mm.

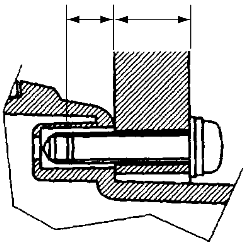

1. Prepare a cutout in the mounting location whose dimensions are as shown on the next page.
2. Fix the display unit by six pan head screw. Refer to the outline drawing on page D-2.

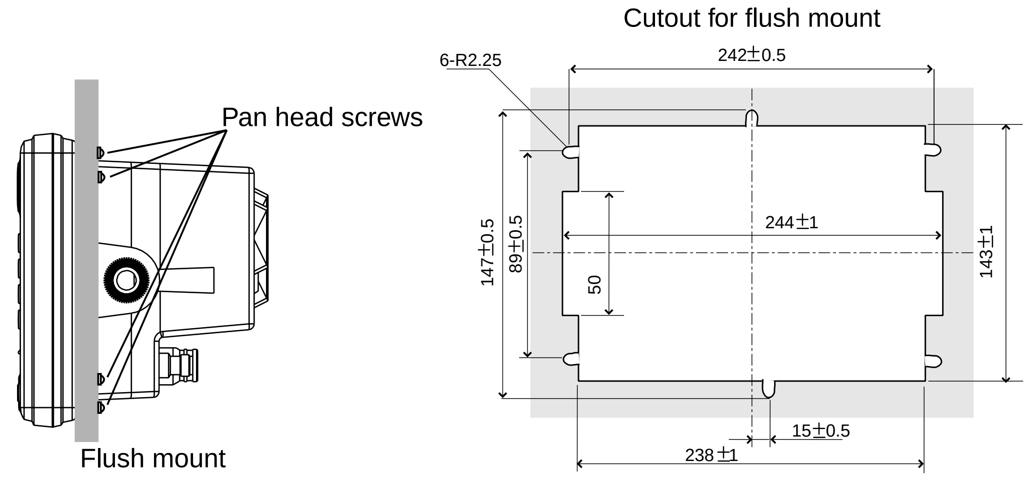

Flush mounting of display unit

1.2 Installation of Antenna Unit

Mounting considerations

Install the antenna unit referring to the installation diagram on page D-3 or D-4. When selecting a mounting location for the antenna unit, keep in mind the following points:

- Select a location out of the radar beam. The radar beam will obstruct or prevent reception of the GPS satellite signal.
- The location should be well away from a VHF antenna. A GPS receiver is interfered by a harmonic wave of a VHF antenna.
- There should be no interfering object within the line-of-sight to the satellites. Objects within line-of-sight to a satellite, for example, a mast, may block reception or prolong acquisition time.
- Mount the antenna unit as high as possible. Mounting the antenna unit as high as possible keeps it free of interfering objects and water spray, which can interrupt reception of GPS satellite signal if the water freezes.
- If the antenna cable is to be passed through a hole which is not large enough to pass the connector, you may unfasten the connector with a needle nose pliers and 3/8-inch open-end wrench. Refasten it as shown in the figure below after running the cable through the hole.

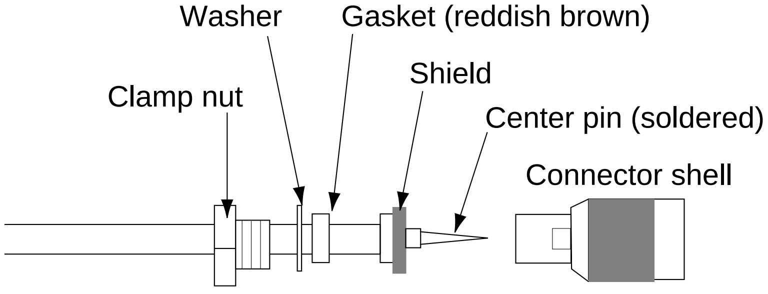

How to assemble the connector

1.3 Installation of Transducers

Installing the inside-hull mount transducer

Necessary tools

You will need the following tools:

- Sandpaper (#100)
- Silicone sealant

Remarks on installation

- Do the installation with the boat hauled out of the water.
- Turn off the engine while installing the equipment.
- Install the transducer in the engine room.

Selecting the mounting location

Keep the following points in mind when selecting a mounting location:

- The mounting location should be where the hull is of single-hull thickness and is void of air or flotation materials other than solid fiberglass between the transducer face and the water.
- Do not place the transducer over hull struts or ribs which run under the hull.
- Avoid a location where the rising angle of the hull exceeds 15°, to minimize the effect of the boat's rolling.
- You will finalize the mounting location through some trial and error. The procedure for this is shown later.

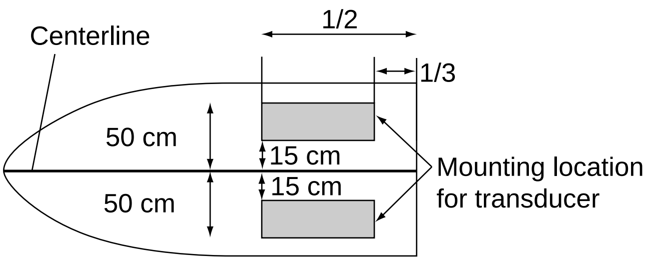

Inside-hull transducer mounting location

Attaching the transducer

1. Clean the transducer face to remove any foreign material. Lightly roughen the transducer face with #100 sandpaper. Also, roughen the inside of the hull where the transducer is to be mounted.
2. Warm the silicone sealant to 40°C before usage to soften it. Coat the transducer face and mounting location with silicone sealant.

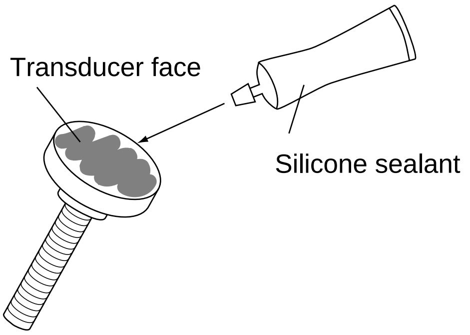

Coating the transducer face with silicone sealant

3. Press the transducer firmly down on the hull and gently twist it back and forth to remove any air which may be trapped in the silicone sealant.

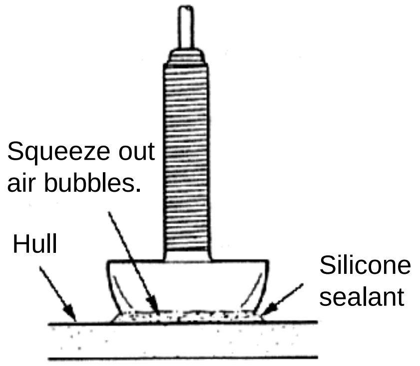

Attaching transducer to hull with silicone sealant

Observing the picture

1. Press the [POWER] key to turn on the display unit.
2. Press the [SNDR] key to select the sounder display.
3. Press the MODE/FREQ soft key to display the following window.

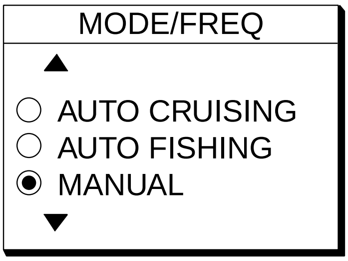

Mode FREQ selection window

4. Select MANUAL with the cursor pad.
5. Press the RETURN soft key.
6. Press the GAIN soft key to display the gain window.

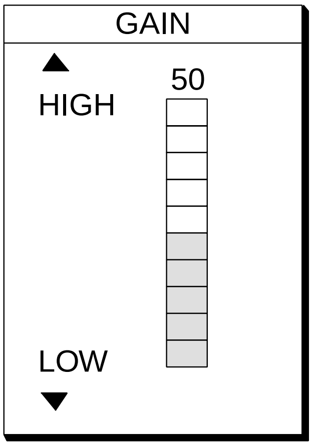

Gain window

7. Confirm that the gain is set at 50 (midpoint).
8. Press the RETURN soft key.
9. Press the RANGE soft key.
10. Press ▲ to select “15 ft”.

11. Press the RETURN soft key. Note the depth seabed.

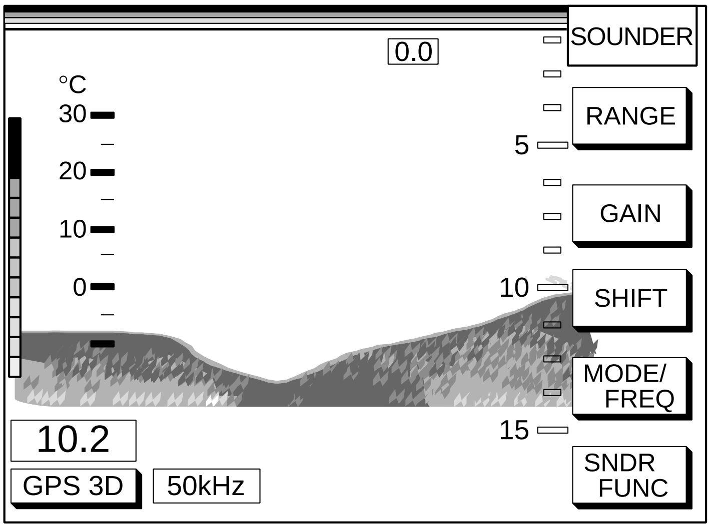

Video sounder picture

If the bottom is displayed in reddish brown and the depth indication appears the mounting location is suitable. You can leave the transducer in position.

If the bottom is not displayed in reddish brown, the mounting location is unsuitable. Relocate the transducer and do the following.

1. Press the [POWER] key to turn off the power.
2. Gently dismount the transducer with piece of wood.
3. Do steps 1 through 5 in the previous procedure. Repeat until a suitable location is found.

Final preparation

Support the transducer with a piece of wood to keep it in place while it is drying. Let the transducer dry 24 – 72 hours.

Installing the thru-hull mount transducer

Transducer mounting location

This type of mounting provides the best performance of all, since the transducer protrudes from the hull and the effect of air bubbles and turbulence neat the hull skin is reduced. When the boat has a keel, the transducer should be at least 30 cm away from it. Typical through hull mountings are shown in the figure on the next page.

The performance of the video sounder is directly related to the mounting location of the transducer, especially for high-speed cruising. The installation should be planned in advance, keeping the standard cable length (8 m) and the following factors in mind.

- Air bubbles and turbulence caused by movement of the boat seriously degrade the sounding capability of the transducer. The transducer should, therefore, be located in a position where water flow is the smoothest. Noise from the propellers also adversely affects performance and the transducer should not be mounted nearby. The lifting strakes are notorious for creating acoustic noise, and these must be avoided by keeping the transducer inboard of them.
- The transducer must always remain submerged, even when the boat is rolling, pitching or up on a plane at high speed.
- A practical choice would be somewhere between 1/3 and 1/2 of the boat’s length from the stern. For planning hulls, a practical location is generally rather far astern, so that the transducer is always in water regardless of the planning attitude.

Transducer outline drawings

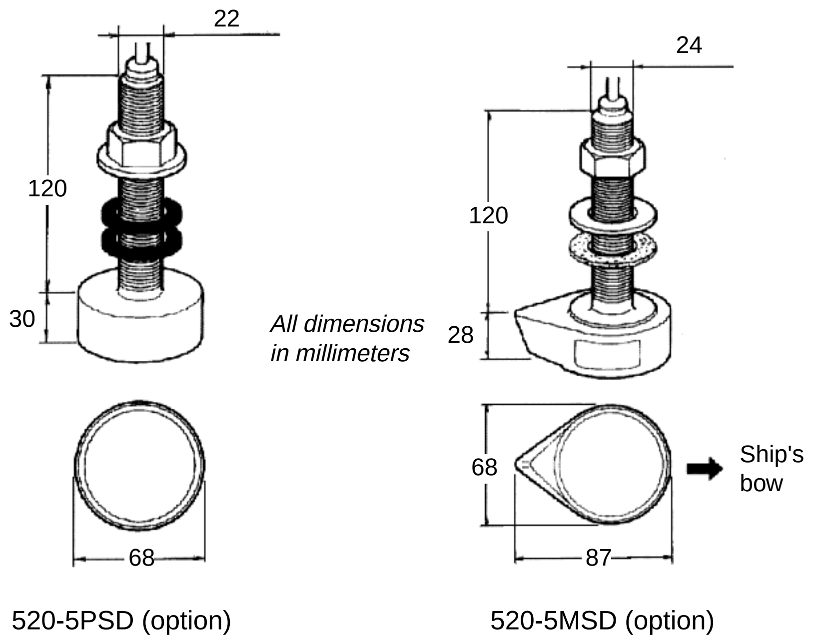

Transducer outline drawings

Acceptable transducer mounting locations

Deep-V hull

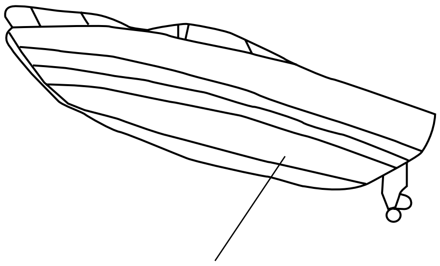

• Position 1/2 to 1/3 length of the hull from stern.
• 15 to 30 cm off center line (inside first lifting strakes.)

Transducer mounting location on deep-V hull

High speed V-planning hull

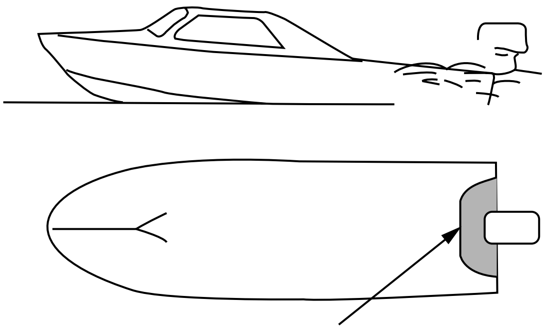

• Within the wetted bottom area
• Deadrise angle within 15°

Transducer mounting location on high speed V-planning hull

Typical through-hull mount transducer installations

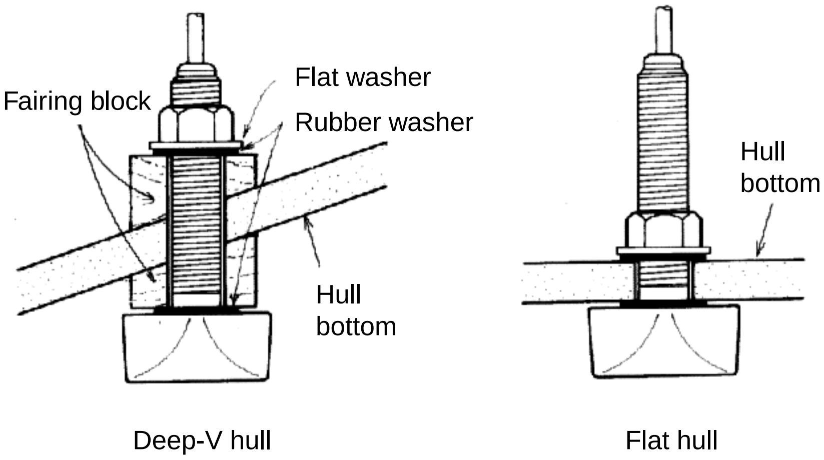

Typical through-hull mount transducer installations

Procedure for installing the thru-hull mount transducer

1. With the boat hauled out of the water, mark the location selected for mounting the transducer on the bottom of the hull.
2. If the hull is not level within 15° in any direction, faring blocks made out of teak should be used between the transducer and hull, both inside and outside, to keep the transducer face parallel with the water line. Fabricate the fairing block as shown below and make the entire surface as smooth as possible to provide an undisturbed flow of water around the transducer. The fairing block should be smaller than the transducer itself to provide a channel to divert turbulent water around the sides of the transducer rather than over its face.

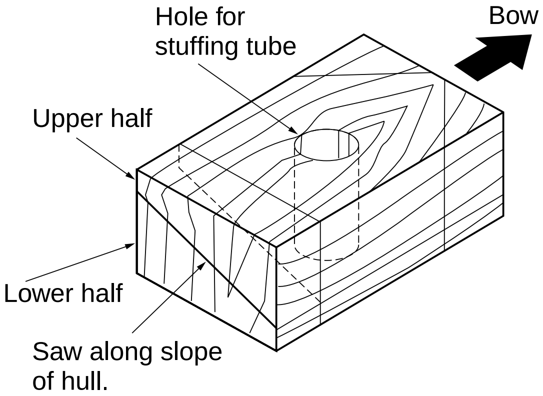

Construction of fairing block

3. Drill a hole just large enough to pass the threaded stuffing tube of the transducer through the hull, making sure it is drilled vertically.
4. Apply a sufficient amount of high quality caulking compound to the top surface of the transducer, around the threads of the stuffing tube and inside the mounting hole (and fairing blocks if used) to ensure watertight mounting.
5. Mount the transducer and fairing blocks and tighten the locking nuts. Be sure that the transducer is properly oriented and its working face is parallel to the waterline.

Note: Do not over-stress the stuffing tube and locking nuts through excessive tightening, since the wood block will swell when the boat is placed in the water. It is suggested that the nut be tightened lightly at installation and retightened several days after the boat has been launched.

Installing the transom mount transducer

This type of mounting is very commonly employed, usually on reactively small I/O or outboard boats. Do not use this method on an inboard motor boat because turbulence is created by the propeller ahead of the transducer.

There are two methods of installation: flush with hull (for flat hulls) and projecting from hull (for deep V-hulls).

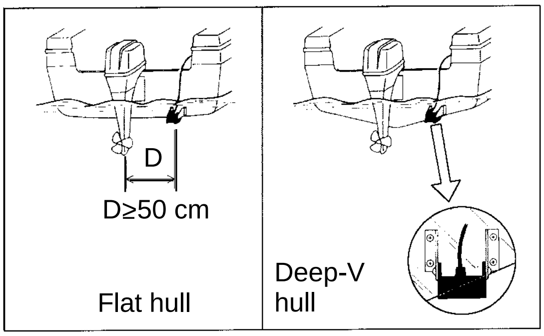

Transom mount transducer mounting locations

Installing the transom mount transducer flush with hull (for flat hulls)

A suitable mounting location is at least 50 cm away from the engine and where the water flow is smooth.

1. Drill four pilot holes in the mounting location.
2. Attach the transducer to the bracket with tapping screws (supplied).
3. Adjust the transducer position so the transducer faces right to the seabed.

   Note: If necessary, to improve water flow and minimize air bubbles staying on the transducer face, incline the transducer about 5° at the rear. This may require a certain amount of experimentation for fine tuning at high cruising speeds.
4. Fill the gap between the wedge front of the transducer and transom with epoxy material to eliminate any air spaces.

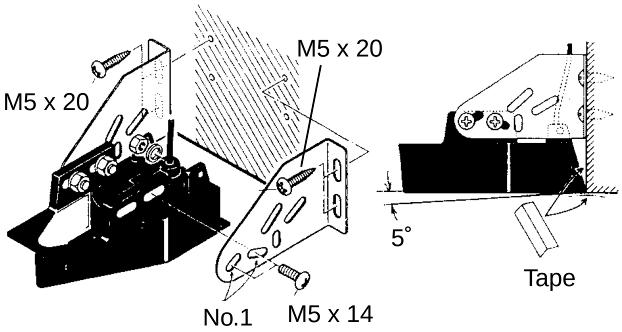

Transom mount transducer, mounting flush with hull

Installing the transom mount transducer projecting from hull (for deep-V hulls)

This method is employed on deep-V hulls and provides good performance because the effects of air bubbles are minimal. Install the transducer parallel with water surface; not flush with hull. If the boat is placed on a trailer care must be taken not to damage the transducer when the boat is hauled out of the water and put on the trailer.

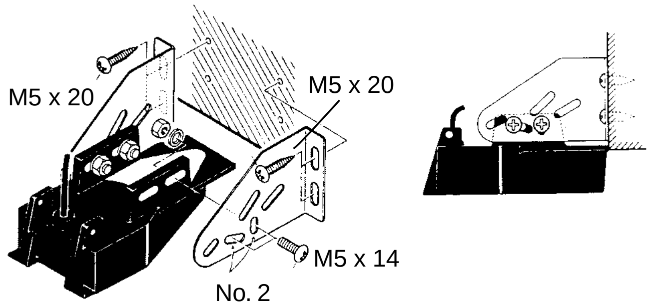

Transom mount transducer, projecting from hull

Transducer preparation

Before putting the boat in water, wipe the face of the transducer thoroughly with a detergent liquid soap. This will lessen the time necessary for the transducer to have good contact with the water. Otherwise the time required for complete “saturation” will be lengthened and performance will be reduced.

Do not paint the transducer. Performance will be affected.

Triducer

525ST-MSD

The triducer is designed for thru-hull mounting.

Mounting considerations

When selecting a mounting location keep the following points in mind:

- Air bubbles and turbulence caused by movement of the boat seriously degrade the sounding capability of the transducer. The transducer should, therefore, be located in a position where water flow is the smoothest. Noise from the propellers also adversely affects performance and the transducer should not be mounted nearby. The lifting strakes are notorious for creating acoustic noise, and these must be avoided by keeping the transducer inboard of them.
- The transducer must always remain submerged, even when the boat is rolling, pitching or up on a plane at high speed.
- A practical choice would be somewhere between 1/3 and 1/2 of the boat’s length from the stern. For planning hulls, a practical location is generally rather far astern, so that the transducer is always in water regardless of the planning attitude.

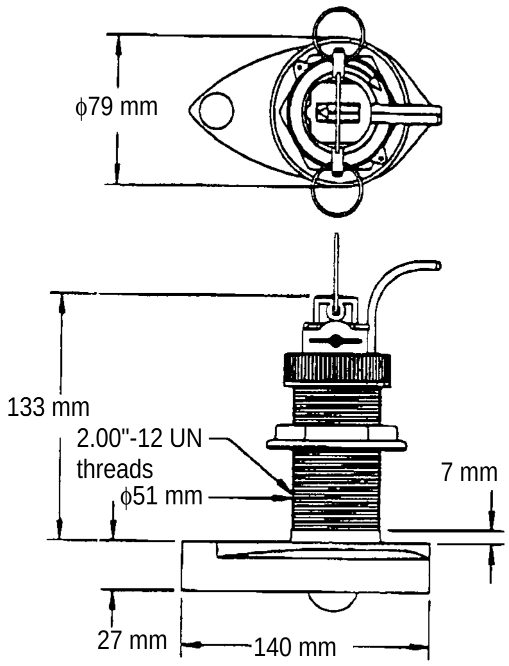

Dimensions of triducer 525ST-MSD

525ST-PWD

The Transom Mount Transducer or TRIDUCER® Multisensor with Integral Release Bracket 525ST-PWD is manufactured by AIRMAR Co. These instructions are included with the sensor.

Pre-test for speed and temperature

Connect the sensor to the instrument and spin the paddlewheel. Check for a speed reading and the approximate air temperature. If there is no reading, return the sensor to your place of purchase.

Tools and materials needed

Scissors
Masking tape
Safety goggles
Dust mask
Electric drill
Drill bit for:
  Bracket holes: 4mm, #23, *or* 9/64”
  Fiberglass hull: chamfer bit (preferred),
  6mm, *or* 1/4”
  Transom hole: 19mm *or* 3/4” (optional)
  Cable clamp holes: 3mm *or* 1/8”
Screwdrivers
Straight edge
Marine sealant
Pencil
Zip-ties
Water-based antifouling paint (**mandatory in salt water**).

Mounting location

To ensure the best performance, the sensor must be submerged in aeration-free and turbulence-free water. Mount the sensor close to the centerline of the boat. On slower heavier displacement hulls, positioning it farther from the centerline is acceptable.

Allow adequate space above the bracket for it to release and rotate the sensor upward.

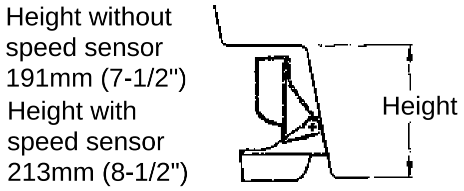

Height required at mounting location

Note 1: Do not mount the sensor in an area of turbulence or bubbles: near water intake or discharge openings; behind strakes, struts, fittings, or hull irregularities; behind eroding paint (an indication of turbulence).
Note 2: Avoid mounting the sensor where the boat may be supported during trailering, launching, hauling, and storage.
Note 3: For single drive boat, mount on the starboard side at least 75 mm (3”) beyond the swing radius of the propeller.

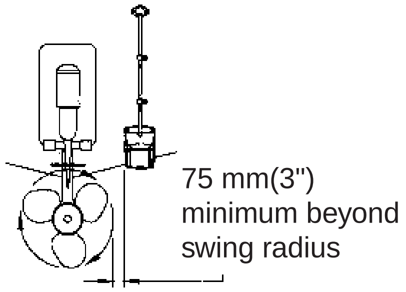

Mounting location on single drive boat

Note 4: For twin drive boat, mount between the drives.

Installation of bracket

1. Cut out the installation template shown on the left.
2. At the selected location, position the template, so the arrow at the bottom is aligned with the bottom edge of the transom. Being sure the template is parallel to the waterline, tape it in place.

Installation template

for starboard side of boat

Drill at locations labeled "B"
for the following transom angles:
16° through 22°

B B B

A A A

Drill at locations labeled "A"
for the following transom angles:
2° through 15°

Align arrow with bottom of transom

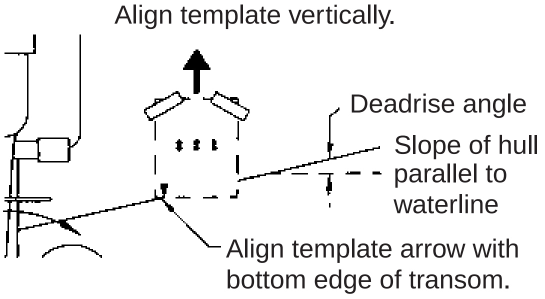

Positioning the template

Warning: Always wear safety goggles and a dust mask.

3. Using a 4 mm, #23, or 9/64” bit, drill three holes 22 mm (7/8”) deep at the locations indicated. To prevent drilling too deeply, wrap masking tape around the bit 22 mm (7/8”) from the point.
   Fiberglass hull: Minimize surface cracking by chamfering the gelcoat. If a chamfer bit or countersink bit is not available, start drilling with a 6mm or 1/4” bit to a depth of 1 mm (1/16”).
4. If you know your transom angle, the bracket is designed for a standard 13° transom angle.
   11°-18° angle: No shim is required. Skip to step 3 in “Adjusting”.
   Other angles: The shim is required. Skip to step 2 of “Adjusting”.

   If you do not know the transom angle, temporarily attach the bracket and sensor to the transom to determine if the plastic shim is needed.
5. Using the two #10 x 1-1/4” self-tapping screws, temporarily screw the bracket to the hull. DO NOT tighten the screws completely at this time. Follow the step 1-4 in “Attaching the Sensor to the Bracket”, before proceeding with “Adjusting”.

__Adjusting__

1. Using a straight edge, sight the underside of the sensor relative to the underside of the hull. The stern of the sensor should be 1-3 mm (1/16-1/8”) below the bow of the sensor or parallel to the bottom of the hull.

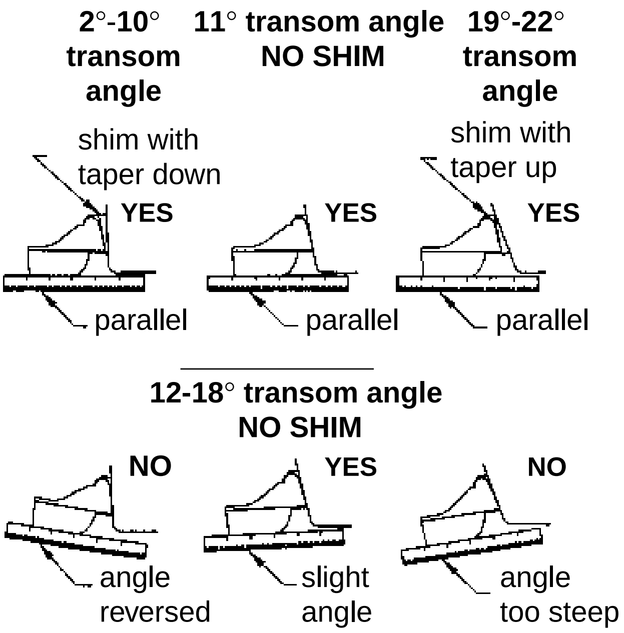

Sensor position and transom angle

Note: Do not position the bow of the sensor lower than the stern because aeration will occur.

2. To adjust the sensor’s angle relative to the hull, use the tapered plastic shim provided. If the bracket has been temporarily fastened to the transom, remove it, Key the shim in place on the back of the bracket.

   2°-10° transom angle (stepped transom and jet boats): Position the shim with the tapered end down.
   19°-22° transom angle (small aluminum and fiberglass boats):
   Position the shim with the tapered end up.
3. If the bracket has been temporarily fastened to the transom, remove it. Apply a marine sealant to the threads of the two #10 x 1-1/4” self tapping screws to prevent water seeping into the transom. Screw the bracket to the hull. Do not tighten the screws completely at this time.
4. Repeat step 1 to ensure that the angle of the sensor is correct.

Note: Do not position the sensor farther into the water than necessary to avoid increasing drag, spray, and water noise and reducing boat speed.

5. Using the vertical adjustment space on the bracket slots, slide the sensor up or down to provide a projection of 3 mm (1/8”). Tighten the screws.

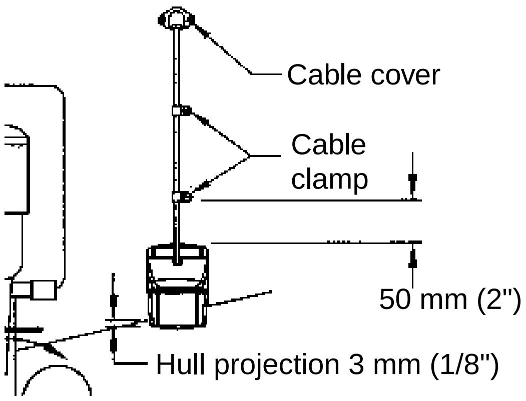

Vertical adjustment and cable routing

Attaching the sensor to the bracket

1. If the retaining cover near the top of the bracket is closed, open it by depressing the latch and rotating the cover downward.

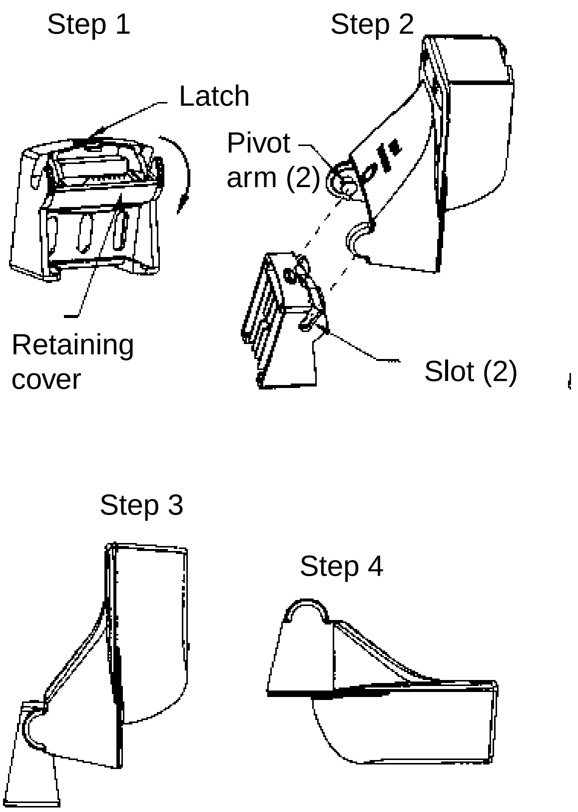

Attaching the sensor to the bracket

2. Insert the sensor's pivot arms into the slots near the top of the bracket.
3. Maintain pressure until the pivot arms click into place.
4. Rotate the sensor downward until the bottom snaps into the bracket.
5. Close the retaining cover to prevent the accidental release of the sensor when the boat is underway.

Cable routing

Route the sensor cable over the transom, through a drain hole, or thorough a new hole drilled in the transom above the waterline.

Never cut the cable or remote the connector; this will void the warranty.
Always wear safety goggles and a dust mask.

1. If a hole must be drilled, choose a location well above the waterline. Check for obstructions such as trim tabs, pumps, or wiring inside the hull. Mark the location with a pencil. Drill a hole through the transom using a 19 mm or 3/4” bit (to accommodate the connector).
2. Route the cable over or through the transom.
3. On the outside of the hull secure the cable against the transom using the cable clamps. Position a cable clamp 50 mm(2”) above the bracket and mark the mounting hole with a pencil.
4. Position the second cable clamp halfway between the first clamp and the cable hole. Mark this mounting hole.
5. If a hole has been drilled in the transom, open the appropriate slot in the transom cable cover. Position the cover over the cable where it enters the hull. Mark the two mounting holes.
6. At each of the marked locations, use a 3 mm or 1/8” bit to drill a hole 10 mm (3/8”) deep. The prevent drilling too deeply, wrap masking tape around the bit 10 mm (3/8”) from the point.
7. Apply marine sealant to the threads of the #6 x 1/2” self-tapping screw to prevent water from seeping into the transom. If you have drilled a hole through the transom, apply marine sealant to the space around the cable where it passes through the transom.
8. Position the two cable clamps and fasten them in place. If used, push the cable cover over the cable and screw it in place.
9. Route the cable to the instrument being careful not to tear the cable jacket when passing it though the bulkhead(s) and other parts of the boat. To reduce electrical interference, separate the sensor cable from other electrical wiring and “noise” sources. Coil any excess cable and secure it in place with zip-ties to prevent damage.

1.4 Installation of Sensors

Transom mount water temperature sensor T-02MTB

- Fix the cable at a convenient location with cable clamp.
- When the cable is led in through the transom board, make a hole of approx. 17 mm diameter to pass the connector. After passing the cable, fill the hole with a sealing compound.

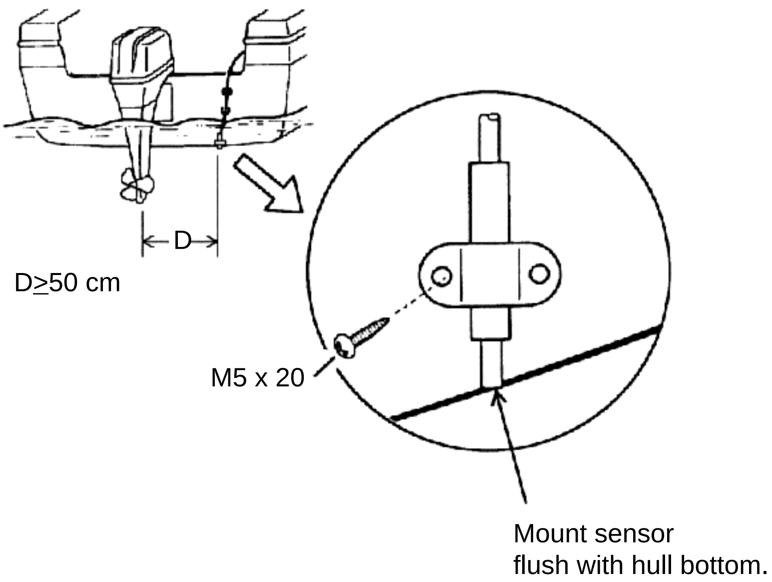

How to install transom mount water temperature sensor T-02MTB

Thru-hull mount water temperature sensor T-02MSB, T-03MSB

Select a suitable mounting location considering the following points:

- Select a mid-boat flat position. The sensor does not have to be installed perfectly perpendicular. The sensor must not be damaged in dry-docking operation.
- Select a place apart from equipment generating heat.
- Select a place in the forward direction viewing from the drain hole, to allow for circulation of cooling water.
- Select a place free from vibration.

T-02MSB

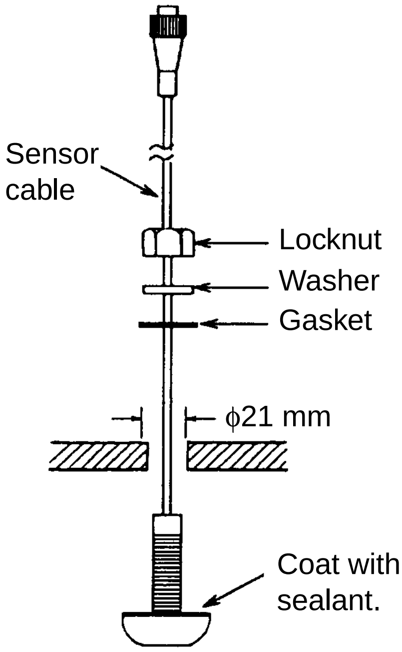

Mounting procedure

1. Drill a hole of 21 mm in diameter in the mounting location.
2. Pass the sensor cable through the hole.
3. Pass gasket, washer and locknut onto cable in that order.
4. Coat the sensor flange with high quality sealant and then fasten the sensor with the locknut. (Torque: max. 59N·m)
5. Launch the boat to check for water leakage around the sensor.

T-03MSB

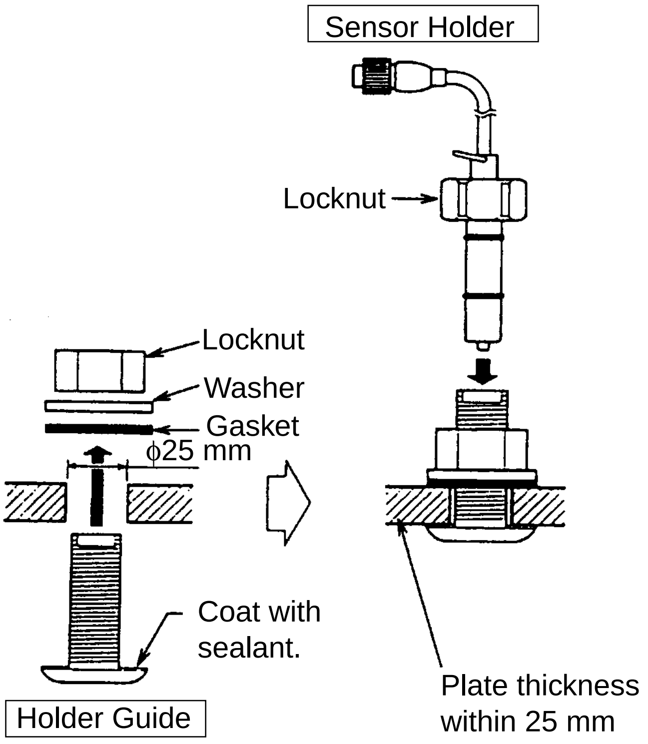

Mounting procedure

1. Drill a hole of 25 mm in diameter in the mounting location.
2. Coat holder guide with high quality sealant, and pass gasket, washer and locknut onto holder guide in that order and then tighten the locknut.
3. Set the sensor holder to the holder guide from inside the boat and then tighten the locknut.
4. Launch the boat to check for water leakage around the sensor.

Thru-hull mount water temperature sensors T-02MSB, T-03MSB

Thru-hull mount water temperature/speed sensor ST-02MSB, ST-02PSB

Select a suitable mounting location considering the following:

- Select a mid-boat flat position. The sensor does not have to be installed perfectly perpendicular. The sensor must not be damaged in dry-docking operation.
- Select a place apart from equipment generating heat.
- Select a place in the forward direction viewing from the drain hole, to allow for circulation of cooling water.
- Select a place free from vibration.

1. Dry-dock the boat.
2. Make a hole of approx. 51 mm diameter.
3. Unfasten locknut and remove the sensor section.
4. Apply high-grade sealant to the flange of the sensor.
5. Pass the sensor casing through the hole.
6. Face the notch on the sensor toward boat’s bow and tighten the flange.
7. Set the sensor section to the sensor casing and tighten the locknut.
8. Launch the boat and check for water leakage around the sensor.

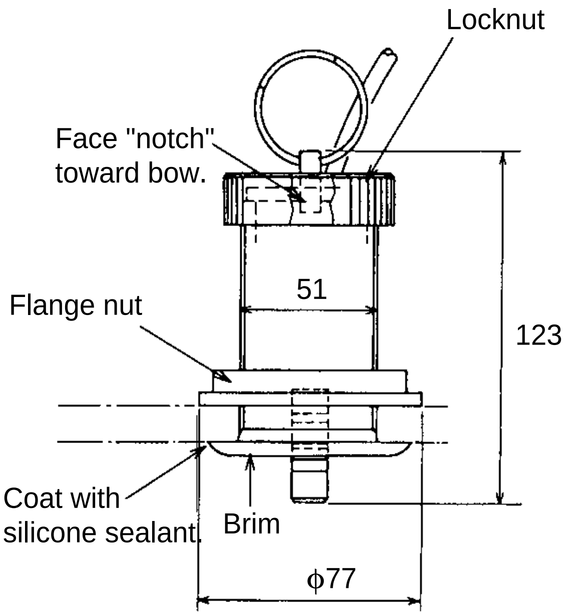

Water temperature/speed sensor ST-02MSB, ST-02PSB

2. WIRING

All wiring are terminated at the rear of the display unit.

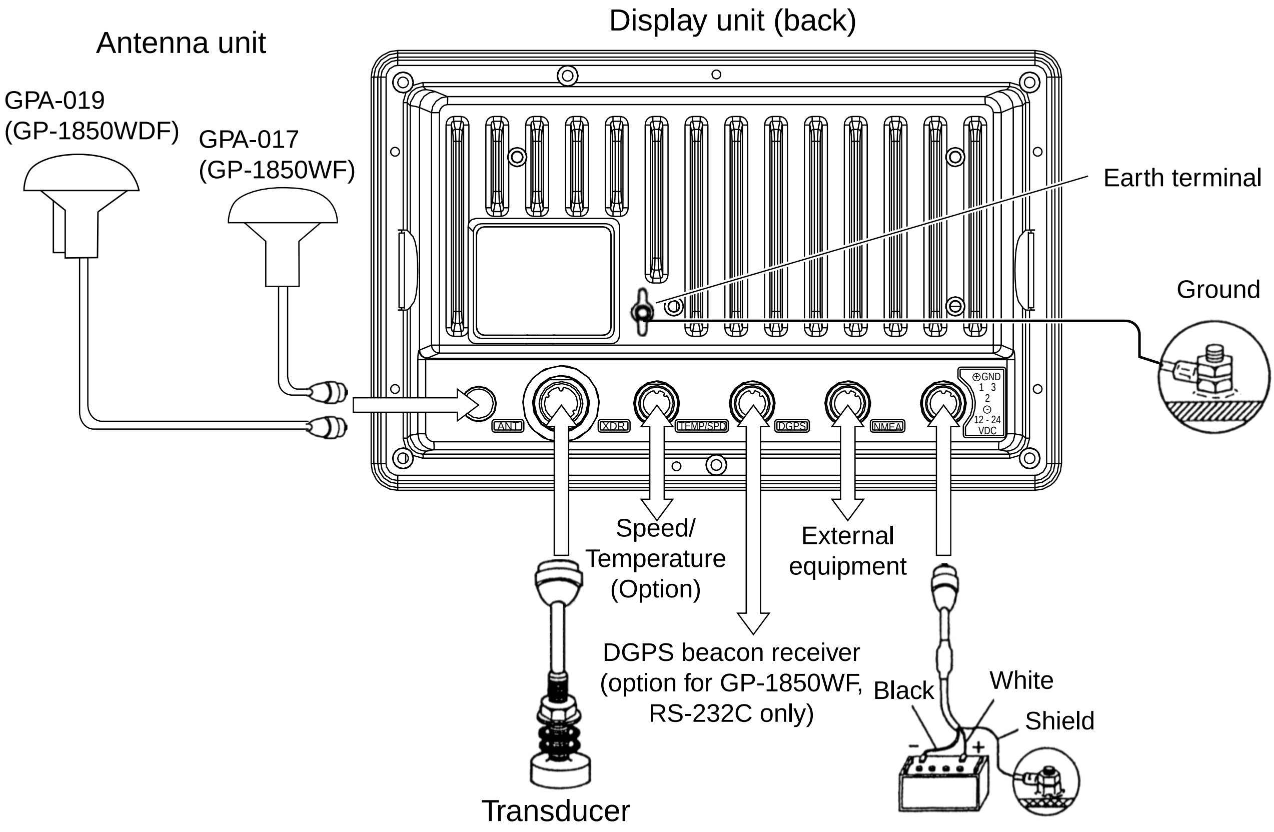

Display unit, rear view

Power cable

Connect the power cable to the power connector. Connect the leads to the battery (12 or 24 VDC); white to plus(+) terminal and black to minus(-) terminal.

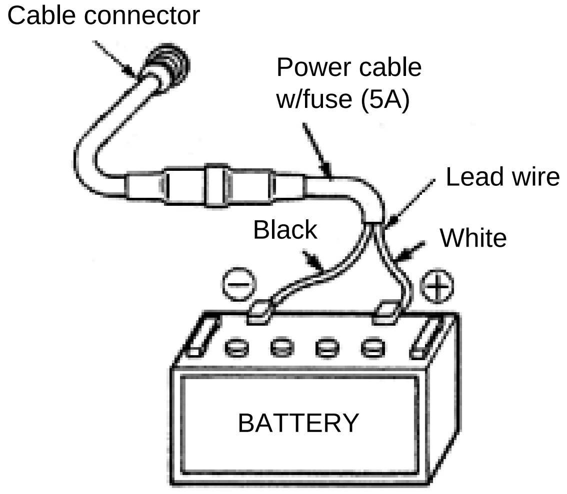

Connecting the power cable to the battery

Antenna unit

Connect the antenna cable to the ANT connector.

Transducer

Connect the transducer cable to the XDR connector.

Water temperature/speed sensor

Connect the water temperature sensor (option) or water temperature/speed sensor (option) to the TEMP/SPD connector.

Ground

The display unit contains several CPUs. While they are operating, they radiate noise, which can interfere with radio equipment. Ground the unit to prevent interference. The grounding wire should be 1.25 sq or larger and as short as possible. Connect the grounding wire to ship's ground. On a fiberglass boat, it is best to install a ground plate that measures about 20 cm by 30 cm on the outside of the hull bottom to provide a ground point. If this is not practical, the engine block can be used.

⚠ CAUTION

Ground the equipment to prevent electrical shock and mutual interference.

Note: Use a “closed” lug to make the ground connection at the display unit. Do not use an “open-type” lug ( ).

Extending antenna cable length

The standard cable is 10 m long. For extension, in case of the GPA-019S or GPA-017S, an antenna cable set of 15 m, 30 m or 50 m is available. Extension cable cannot be used with the GPA-017 or GPA-019.

Cable length	Necessary parts	Code No.
15 m	TNC-PS-3D-15	000-133-670
30 m	CP20-01700	004-372-110
50 m	CP20-01710	004-372-120

Extension cable line-up (in case of 15 m, 30 m or 50 m)

Fabricate the end of the antenna cable and attach the coaxial connector. Details are shown on next page.

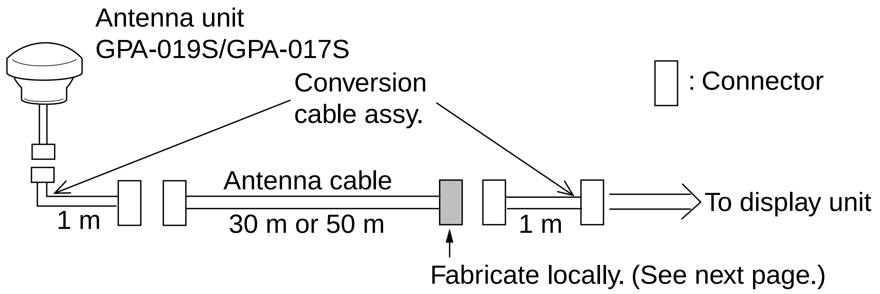

Cable extension (CP20-01700, CP20-01710)

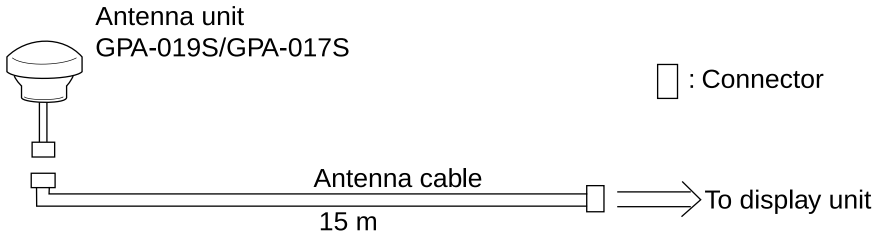

Cable extension (TNC-PS-3D-15)

Waterproofing connector

Wrap connector with vulcanizing tape and then vinyl tape. Bind the tape end with cable-tie.

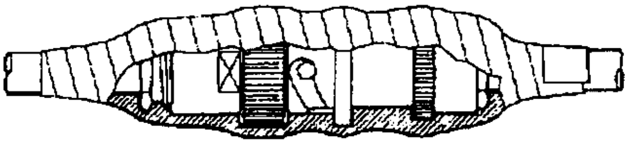

Waterproofing connector

How to attach the N-P-8DFB connector

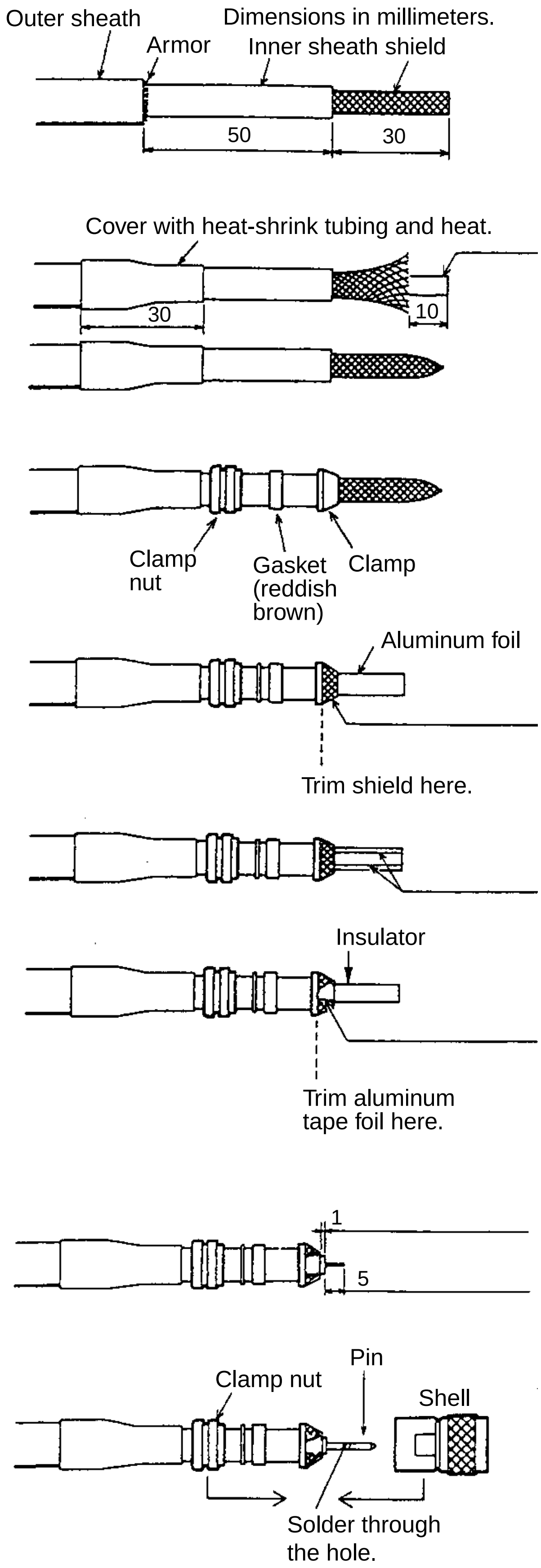

Remove outer sheath and armor by the dimensions shown left.
Expose inner sheath and shield by the dimensions shown left.

Cut off insulator and core by 10mm.

Twist shield end.

Ship on clamp nut, gasket and clamp as shown left.

Fold back shield over clamp and trim.

Cut aluminum foil at four places, 90° from one another.

Fold back aluminum foil onto shield and trim.

Expose the insulator by 1mm.

Expose the core by 5mm.

Slip the pin onto the conductor. Solder them together through the hole on the pin.

Insert the pin into the shell. Screw the clamp nut into the shell.
(Tighten by turning the clamp nut. Do not tighten by turning the shell.)

Fabrication of coaxial cable

3. INITIAL SETTINGS

3.1 NMEA Setting

NMEA port

This setting should be done when connecting with other equipment, autopilot, radar or remote display.

1. Press the [MENU] key.
2. Press the CONFIGURATION soft key.
3. Press the SETUP NMEA PORT1 soft key.
4. Press the cursor pad to select FORMAT.
5. Press the EDIT soft key to display the following window.

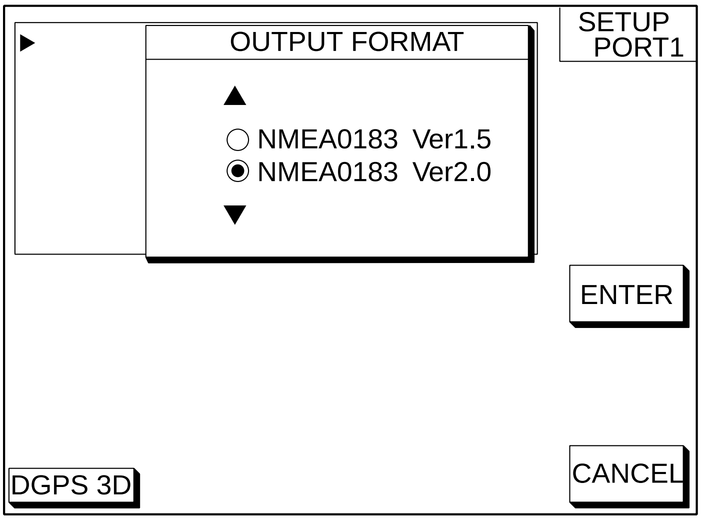

Output format window (PORT 1)

6. Select NMEA version depending on the specification of the equipment connected. The selected item is indicated by black button.
7. Press the ENTER soft key.
8. Press the [PLOT] key to return to the plotter display.

DGPS port

Set the following when connecting with DGPS beacon receiver GR-80 or the DGPS beacon receiver is incorporated, PC to the DGPS port.

Note: Signal level for DGPS port is RS232C.

1. Press the [MENU] key.
2. Press the CONFIGURATION soft key.
3. Press the SETUP NMEA/DGPS PORT 2 soft key.
4. Select FORMAT, and then press the EDIT soft key.
   The following window appears.

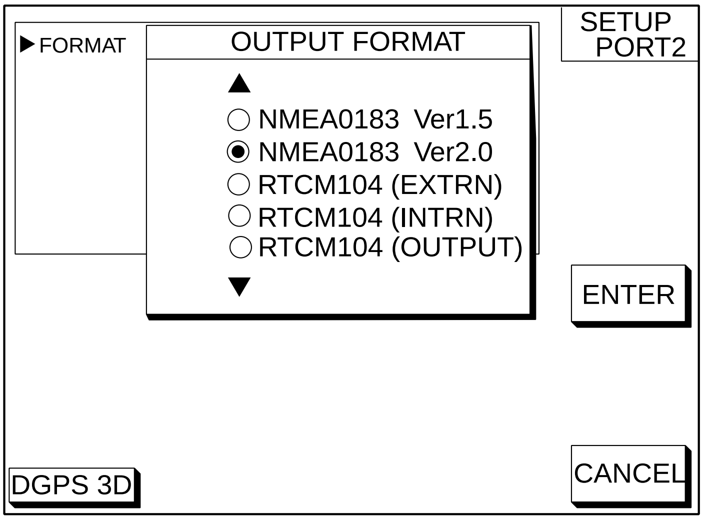

Output format window (PORT 2)

5. Select NMEA version. The selected item is indicated by black button.

NMEA0183 Ver1.5/2.0:	Select one when connecting PC or RS-232C equipment.
RTCM104 (EXTERN):	Select this when connecting external DGPS beacon receiver.
RTCM104 (INTRN):	Select this for built in internal DGPS beacon receiver.
RTCM104 (OUTPUT):	Select this when outputting differential data of the internal DGPS beacon receiver to other GPS navigator.

Note 1: Note that you cannot setup sentences when you select RTCM104 at the format.
Note 2: For RS-422 format, the level converter (IF-1432) is required for connection of external equipment.

6. Press the ENTER soft key.
7. Press the [PLOT] key to finish.

3.2 Output Data Sentences

Select output data sentences for external equipment as follows.

1. Press the [MENU] key.
2. Press the CONFIGURATION soft key.
3. Press the SETUP NMEA PORT1 soft key.
4. Press the SELECT SNTNC. soft key to display the SELECT SENTENCE window.

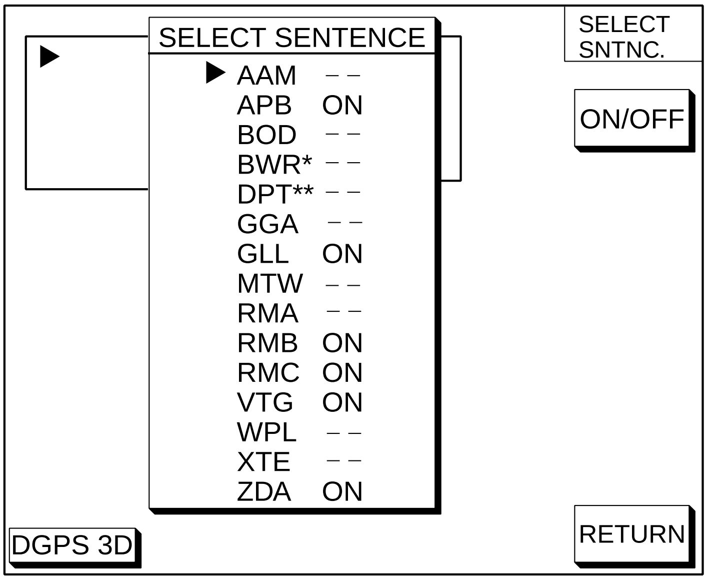

*: BWR for Rhumb line
BWC for Great circle
**: DPT for NMEA0183 Ver. 2.0
DBT for NMEA0183 Ver. 1.5

Select sentence window

5. Select data sentence you want to output.
6. Press the ON/OFF soft key. To output data, select ON.
7. Repeat to select other sentences.
8. Press the RETURN soft key.
9. Press the [PLOT] key to return the plotter display.

<u>Input/Output data sentences</u>

Port		Format	Data	Remarks
NMEA	Input	NMEA-0183 Ver. 2.0 Ver. 1.5 IEC601162-1	TLL*, MTW, WPL*	WPL: GP only
	Output		AAM, APB, BOD, BWC/BWR, GGA, GLL, RMA, RMB, RMC, VTG, WPL, XTE, ZDA, DBT/DPT, MTW, GTD**	GREAT CIRCLE: BWC RHUMB LINE: BWR NMEA Ver 1.5: DBT NMEA Ver 2.0: DPT
DGPS	Input	NMEA-0183 Ver. 2.0 Ver. 1.5 RS232C RTCM104	TLL*, MTW, WPL*, DBT/DPT	WPL: GP only
	Output		AAM, APB, BOD, BWC/BWR, GGA, GLL, RMA, RMB, RMC, VTG, WPL, XTE, ZDA, DBT/DPT, MTW, GTD**	GREAT CIRCLE: BWC RHUMB LINE: BWR NMEA Ver 1.5: DBT NMEA Ver 2.0: DPT

*: Cannot be input consecutively.
**: Output automatically when LC or LA is selected.

3.3 Antenna Height

Enter height of antenna above water. (Default setting: 5 m)

1. Press the [MENU] key.
2. Press the GPS/DGPS/TD OPTIONS soft key.
3. Press the GPS SETUP OPTIONS soft key.
4. Select ANT. HEIGHT.
5. Press the EDIT soft key.

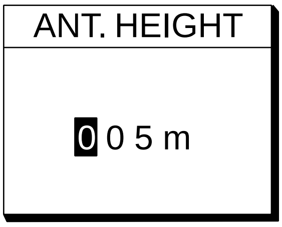

Ant. height window

6. Enter the height (3 digits) of the antenna above sea level using the numeric keys.
   If you enter wrong antenna height, press the CLEAR soft key.
7. Press the ENTER soft key.
8. Press the [PLOT] key to return the plotter display.

3.4 DGPS Setting

When external DGPS beacon receiver (RS-232C only) is connected or the DGPS beacon receiver is incorporated, set the DGPS mode referring to the following procedure.

1. Press the [MENU] key.
2. Press the GPS/DGPS/TD OPTIONS soft key.
3. Press the DGPS/WAAS SETUP OPTIONS soft key.

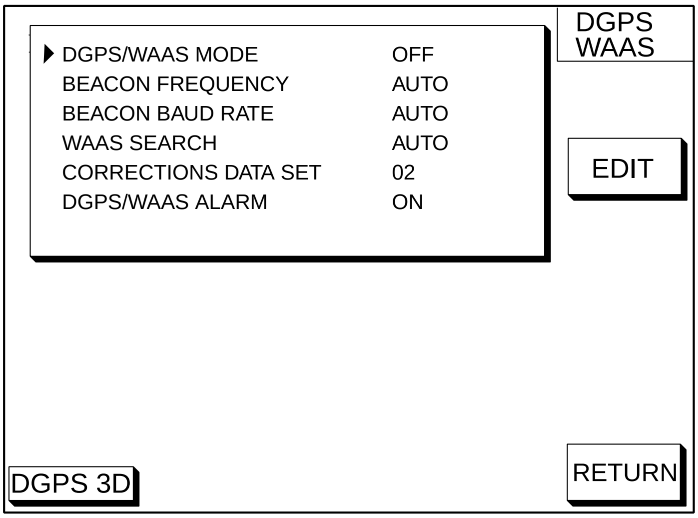

DGPS/WAAS options window

4. Select DGPS/WAAS MODE and press the EDIT soft key.
5. Select DGPS or AUTO and press the ENTER soft key.
   WAAS: WAAS data can be received.
   AUTO: DGPS, WAAS or GPS data can be automatically received, The order of priority is DGPS, WAAS and GPS.

Note: If the external DGPS beacon receiver GR-80 is connected to the GP-1850WF, refer to the interconnection diagram below.

<u>Connection with GR-80</u>

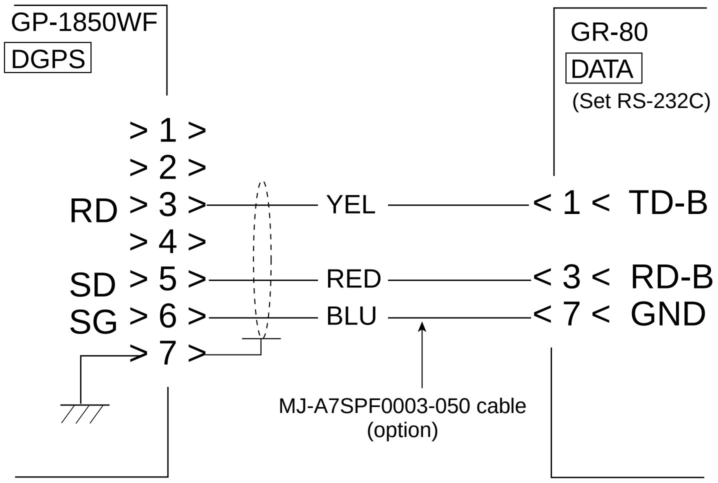

6. Select BEACON FREQUENCY by the cursor pad.
7. Press the EDIT soft key to display the following window.

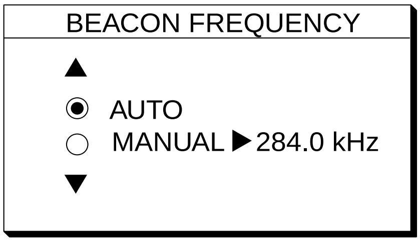

Beacon frequency window

8. Select AUTO or MANUAL by the cursor pad. When you select MANUAL, operate the cursor pad to move the cursor to frequency dialog box. And press the cursor pad to select the frequency desired.
   AUTO: DGPS reference station can be searched automatically.
9. Press the [ENTER] key.
10. Select BEACON BAUD RATE by the cursor pad.
11. Press the EDIT soft key to display the following window. Beacon baud rate cannot be set when BEACON FREQUENTRY is set to AUTO.

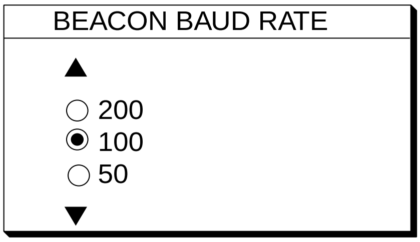

Beacon baud rate window

12. Select beacon baud rate corresponding to DGPS reference station to use.
13. Press the [ENTER] key.
14. Press the [PLOT] key to return the plotter display.

3.5 External Equipment Setup (Option)

This section shows you how to set up the GP-1850WF/1850WDF when external equipment is connected. If a water temperature/speed sensor is installed, you should complete this section with the boat in the water and running, to confirm speed/water temperature readout.

Speed Source

1. Press the [MENU] key.
2. Press the DISPLAY OPTIONS, NEXT PAGE soft keys to show the DISPLAY SETUP2 menu.

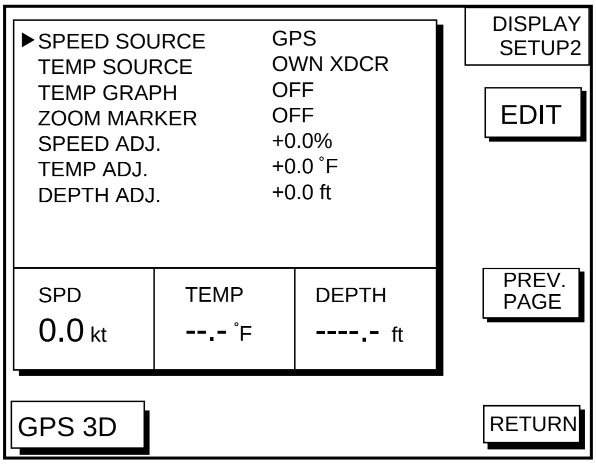

Display setup 2 menu

3. Select SPEED SOURCE, EDIT soft keys to show the SPEED SOURCE window.

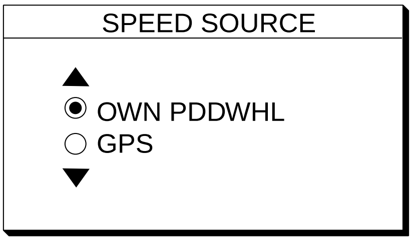

Speed source window

4. Select source of speed; OWN PDDWHL (speed sensor) or GPS.
   The selected item is indicated by black button. Adjust speed when you select OWN PDDWHL. Refer to Speed Adjustment shown below.
5. Press the ENTER soft key.

Speed Adjustment

For speed sensor-equipped set, you may offset the speed readout if it is wrong. Run the boat at various speeds and watch the speed readout at the bottom of the screen. If it is unreasonably wrong. Adjust speed when you select own speed source OWN PDDWHL.

1. At the DISPLAY SETUP 2 menu, select SPEED ADJ.
2. Press the EDIT soft key to display the SPEED ADJ window.

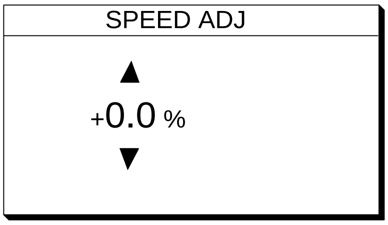

Speed adj window

3. Correct speed readout. The adjustment range is –50% to +50%. For example, if readout is 10% lower than actual speed, enter +10%.
4. Press the RETURN soft key.

Temperature Adjustment

For water temperature sensor-equipped sets, you may offset the water temperature readout if it is wrong. Watch the watertemperature readout at the bottom of the screen. If it is unreasonably wrong, adjust the temperature readout as follows.

1. At the DISPLAY SETUP 2 menu, select TEMP ADJ.
2. Press the EDIT soft key to display the TEMP ADJ window.

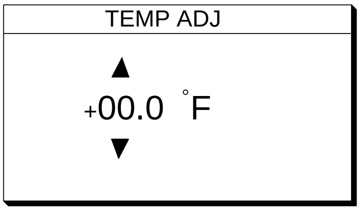

Temp adj. Window

3. Correct water temperature readout. The adjustment range is –99.9° to +99.9°F. For example, if the readout is 2° higher than actual temperature, enter -2°.
4. Press the RETURN soft key.

3.6 Selecting the Echo Sounder Output Power

If 1 kW transducer (50/200-1T) is installed, the internal setting should be changed from 600 W to 1 kW. Also, attach the TX power label (supplied) to the place shown below, and draw a line through the power which you don't use by oil base magic marker.

Note: Matching Box MB-1000 and cable assembly 02S4092 are required for 1 kW transducer connection. For details, see the interconnection diagram at the end of this manual.

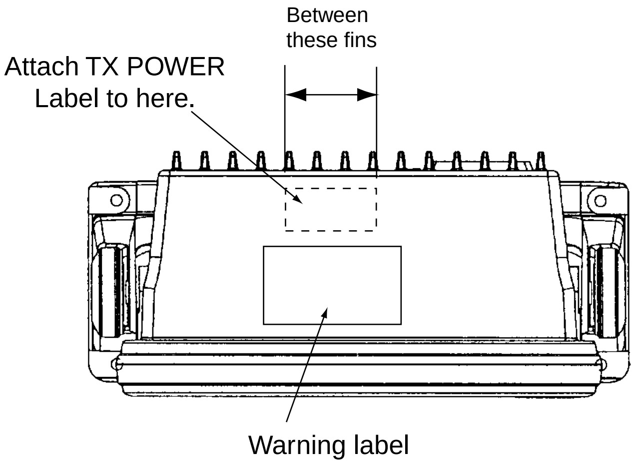

Display unit, top view

To change to 1 kW power, do the following:

1. Turn off the power. Wait at least one minute before opening the cover, to allow capacitors to discharge.
2. Remove nuts attached to XDR, SPD/TEMP, DGPS, NMEA and power supply connectors at the rear of the display.
3. Remove nut and washer attached to the ANT connector.

4. Remove ten binding screws (M3 x 12) from the rear of the display unit to separate the panel/chassis assembly from the cover assembly.

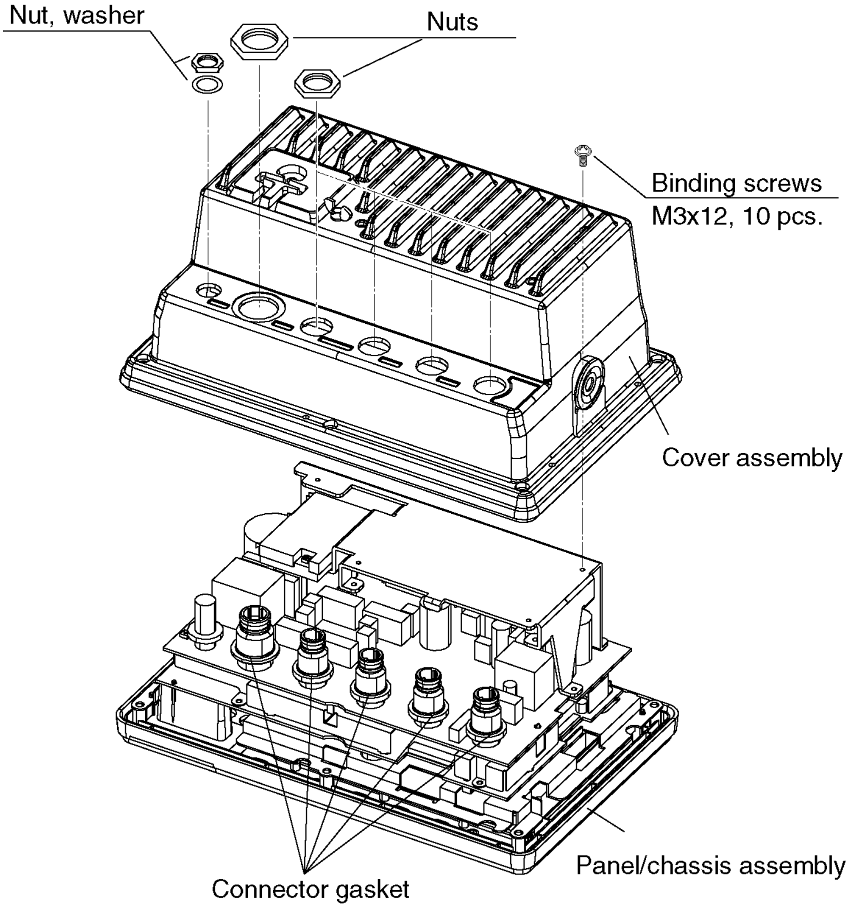

Removing cover assembly

Do not connect the power cable with the cover removed.

5. Move the jumper block on JP1 from 3-4 to 1-2 on the ANLG Board.

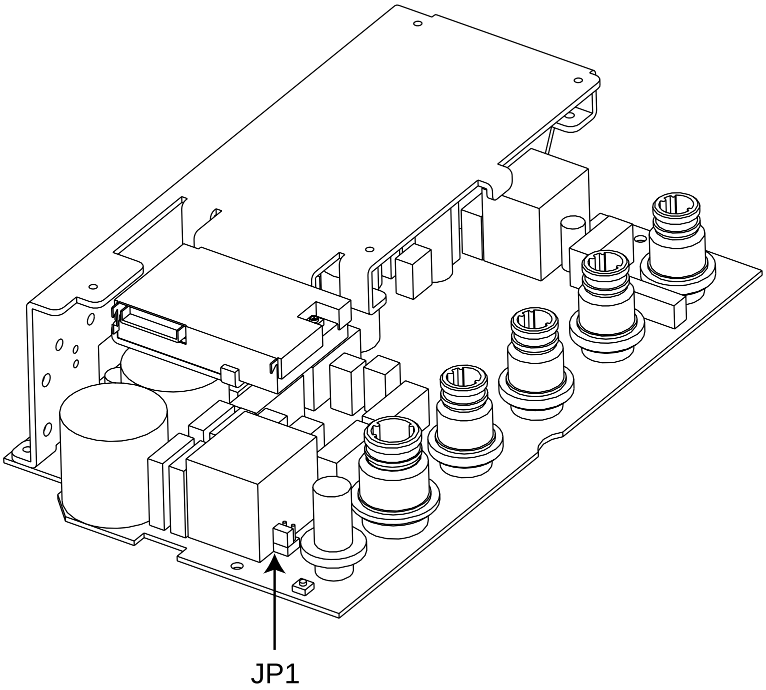

ANLG Board

6. Remount the cover assembly.

Note: Confirm that the following parts are attached:

- Inside of the cover: Shield gaskets, GN gasket (See the figure below.)
- On ANLG Board: Connector gasket (See the page 3-10.)

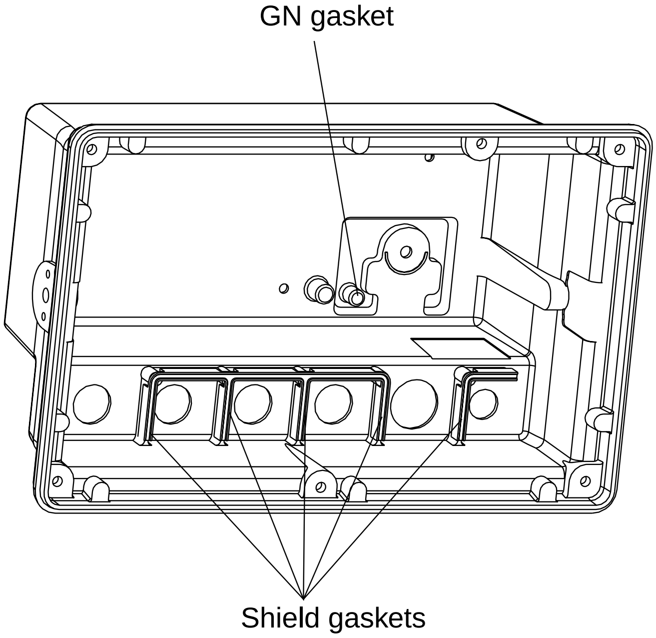

Inside of the cover

7. Tighten nuts to torque shown below and in the order shown in below.
   No. 1 through No. 5 : 0.74 – 0.78 Nm
   No. 6 : 1.37 –1.57 Nm

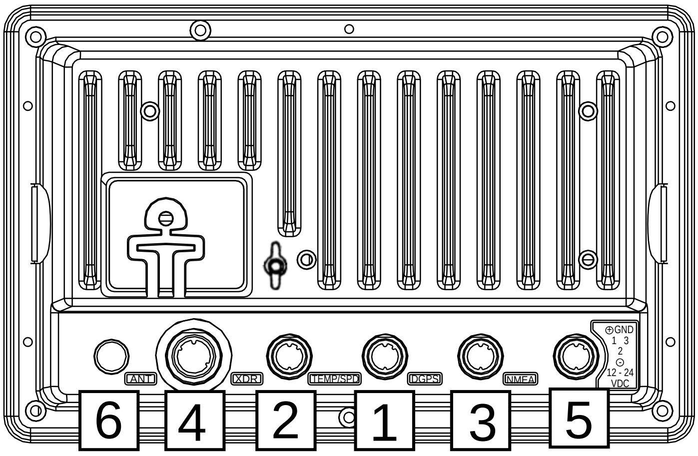

Display unit, rear view

8. Tighten ten binding screws (M3 x 12) fixing the cover to torque of 0.74 – 0.78 Nm.

4. INCORPORATION OF DGPS BEACON RECEIVER KIT (for GP-1850WF)

The DGPS beacon receiver GR-7000A can be incorporated in the GP-1850WF to provide it with DGPS capability. Two kinds of kit are available as shown.

GR-7000A-1650-10N-019

Name	Type	Code No.	Qty
Antenna Unit	GPA-019	000-142-416	1
Beacon Receiver	GR-7000A	000-143-249	1
Connector Assy.	PH6P-W-L240	000-141-548	1
Cable tie	CV-100	000-570-322	2
Pan head screws*	M3X10 C2700W	000-881-405	4
Screw*	M3X12 SUS304	000-805-905	6
Cable Assy.*	S.FL2-2LP0.7-D-WHT (121)	000-141-491	1
Clamp	HP-2N	000-570-000	1
Cable Assy.	S.FL2-2LP0.7-D-WHT (250)	000-143-877	1
Screw	3X8 SUS410	000-881-405	4
Cable Assy.*	S.FL2-2LP0.7-D-WHT (175)	000-141-490	1

* Not used

GR-7000A-1650-15N-019S

Name	Type	Code No.	Qty
Antenna Unit	GPA-019S	000-142-545	1
Beacon Receiver	GR-7000A	000-143-249	1
Cable Assy.	TNC-PS-3D-15	000-133-670	1
Connector Assy.	PH6P-W-L240	000-141-548	1
Cable tie	CV-100	000-570-322	2
Pan head screws*	M3X10 C2700W	000-881-405	4
Screw*	M3X12 SUS304	000-805-905	6
Cable Assy.*	S.FL2-2LP0.7-D-WHT (121)	000-141-491	1
Clamp	HP-2N	000-570-000	1
Cable Assy.	S.FL2-2LP0.7-D-WHT (250)	000-143-877	1
Screw	3X8 SUS410	000-802-951	4
Cable Assy.*	S.FL2-2LP0.7-D-WHT (175)	000-141-490	1

* Not used

Disassembly

Procedure

1. Turn off the power. Wait at least one minute before opening the cover, to allow capacitors to discharge.
2. Remove nuts attached to XDR, SPD/TEMP, DGPS, NMEA and power supply connectors at the rear of the display unit.

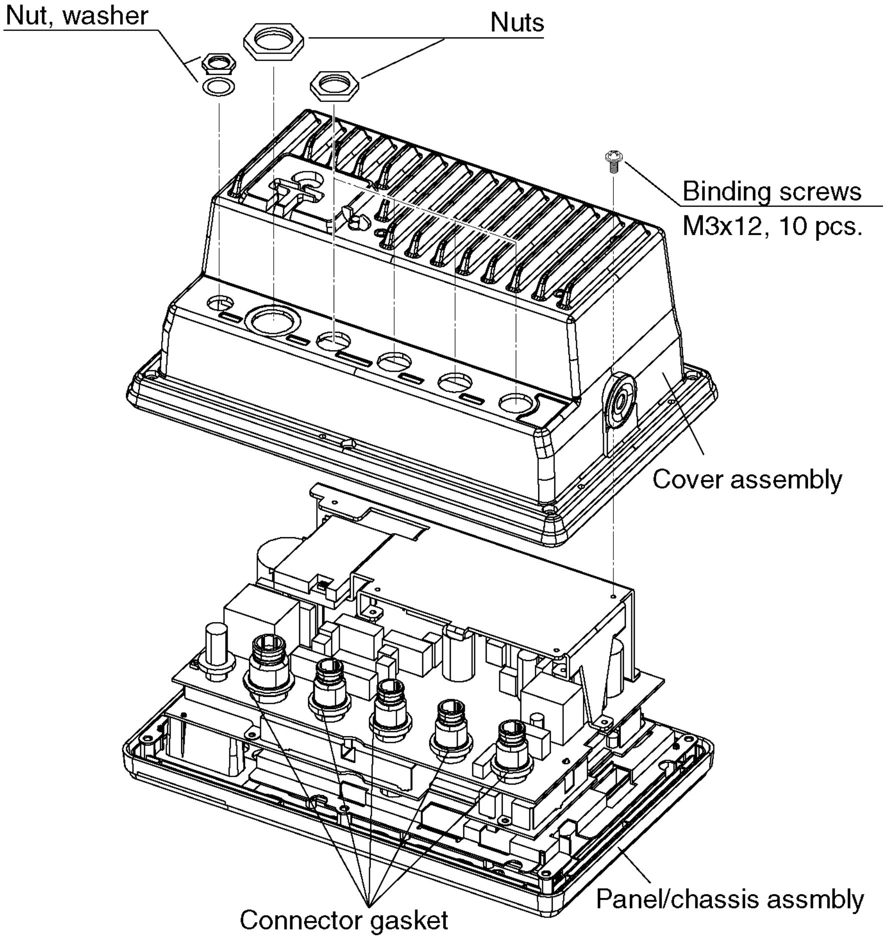

> **⚠ WARNING**
>
> Do not connect the power cable with the cover removed.

Removing cover assembly

3. Remove nuts and washer attached to ANT connector.
4. Remove ten screws at rear of the display unit to detach panel/chassis assembly from the cover assembly.

Installation of beacon receiver

Procedure

1. Dismount chassis assembly from panel/chassis assembly by disconnecting the connector and PH8P from J8 on MAIN Board shown in the figure below.

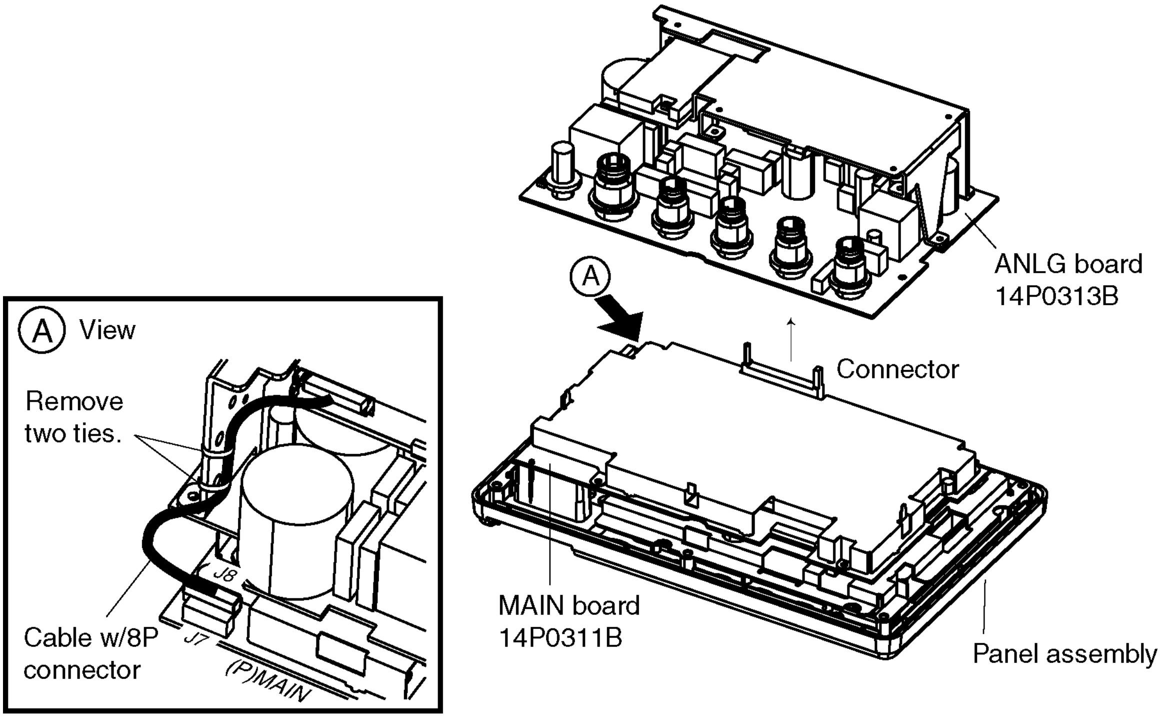

Dismounting chassis assembly

2. Dismount heat sink from chassis assembly by unfastening three screws on the ANLG board, loosening two screws at TR fixing plates and disconnecting the connector of the mini pin coaxial cable.

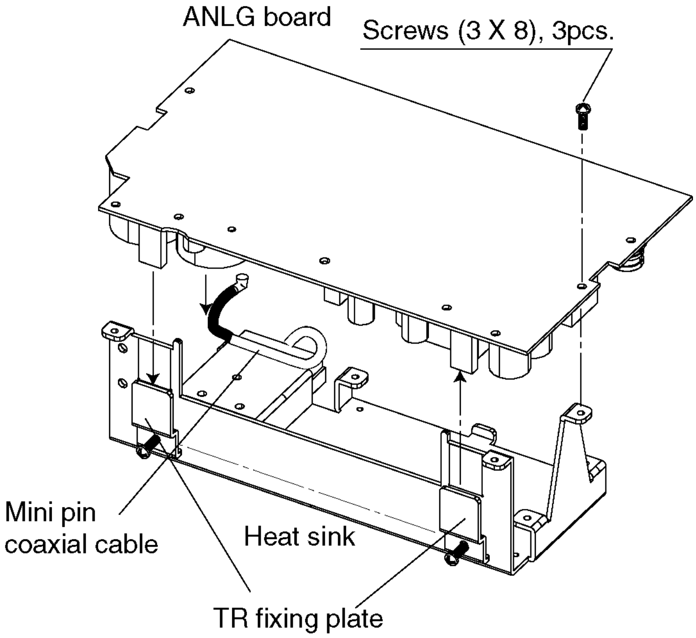

Chassis assembly

Handling of Coaxial Cable

- Do not touch the connector with bare hands; use gloves.
- Use radio pincers to remove, and pull out straightly.
- Plug in connector straightly.

3. Fasten the GR-7000A (DGPS beacon receiver) to the heat sink with four 3X8 screws as shown in the figure below.

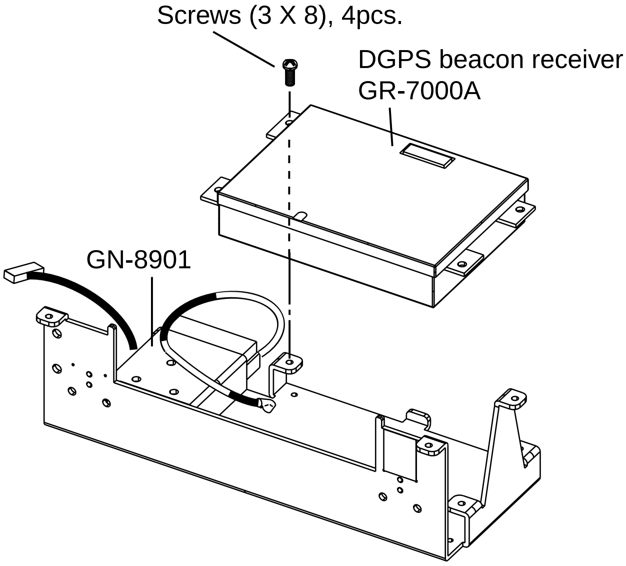

Installation of DGPS beacon receiver

4. Open the cover of GR-7000A to connect two coaxial cables shown below.

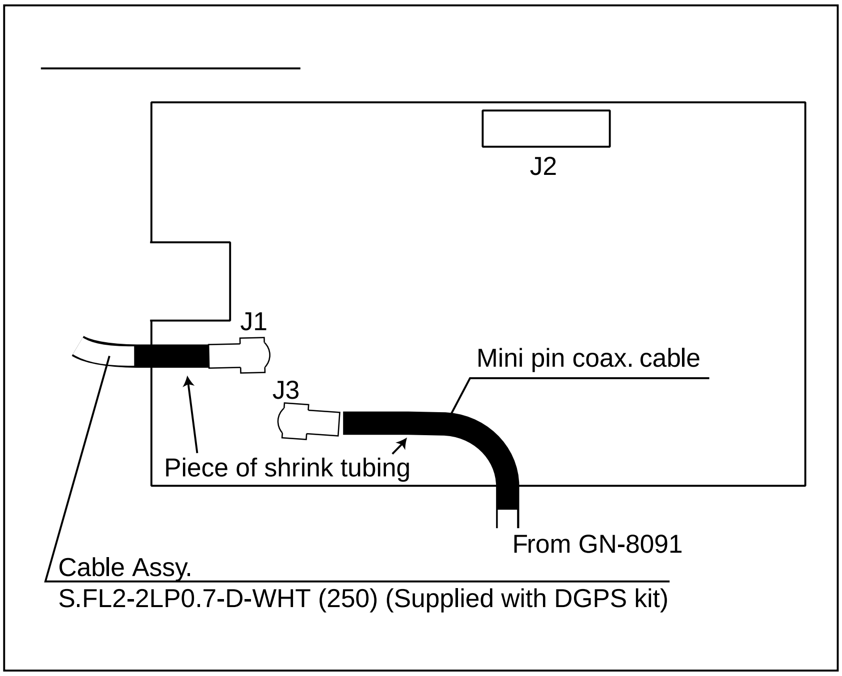

Connecting the coaxial cables in GR-7000A

5. Close the cover of GR-7000A passing the two cables out through respective notches in the cover.
6. Plug PH6P-W-L240 connector to J2 on the GR-7000A through the cover.
7. Wire cable assembly as shown in the figure below.

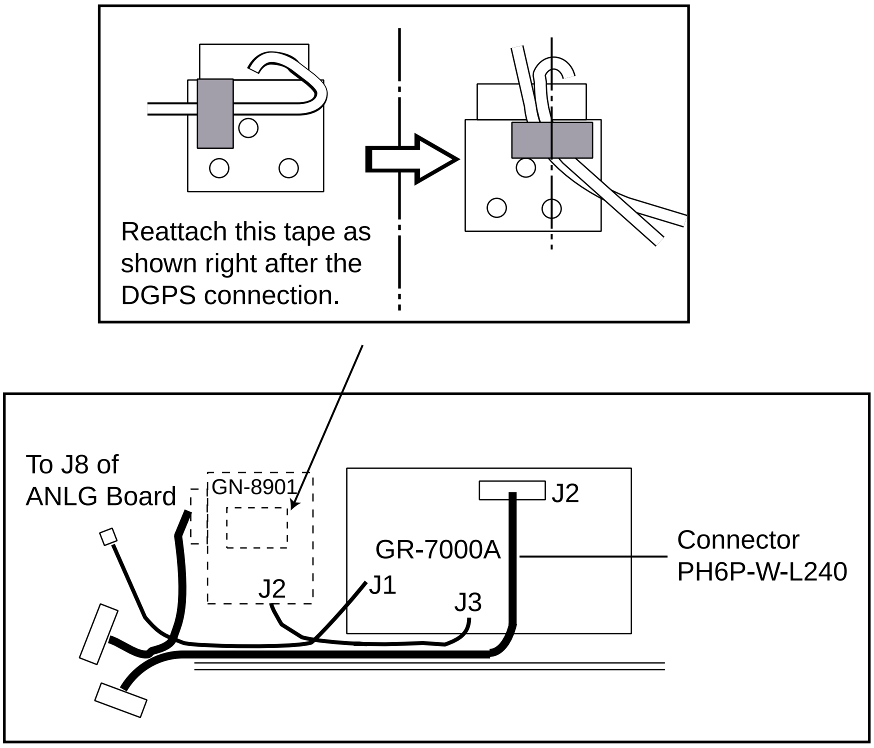

Wiring the Cable assembly

8. Mount the ANLG board on the heat sink referring to step 2. Fasten cable assy. S.FL2-2LP0.7-D-WHT (250), 8P connector cable and 6P connector cable by cable tie (CV-100, supplied) as shown in the figure below. Fix cable assy. S.FL2-2LP0.7-D-WHT (250) with vinyl tape.

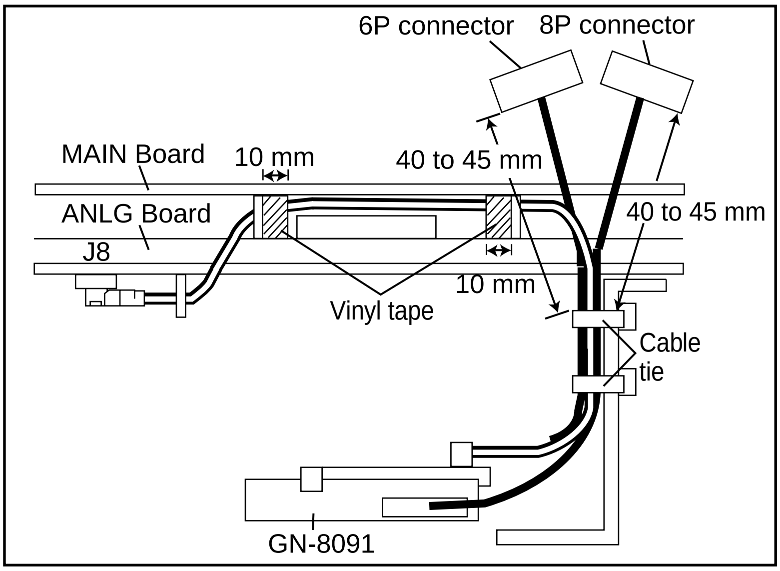

Attaching cable tie

9. Connect J1 of GR-7000A to J8 of ANLG board (Refer to the previous page).
10. Mount chassis assembly on the panel assembly. Connect 8P connector and 6P connector to Main board as shown in the figure below.

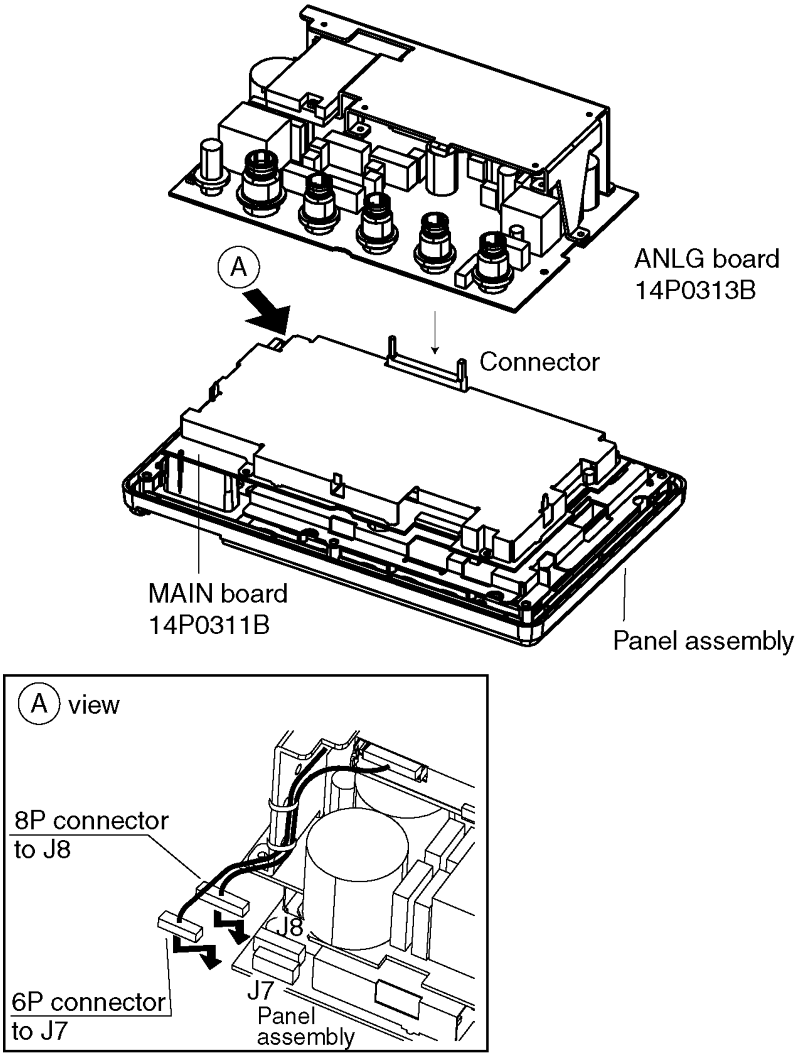

Attaching chassis assembly

11. Reassemble the display unit.

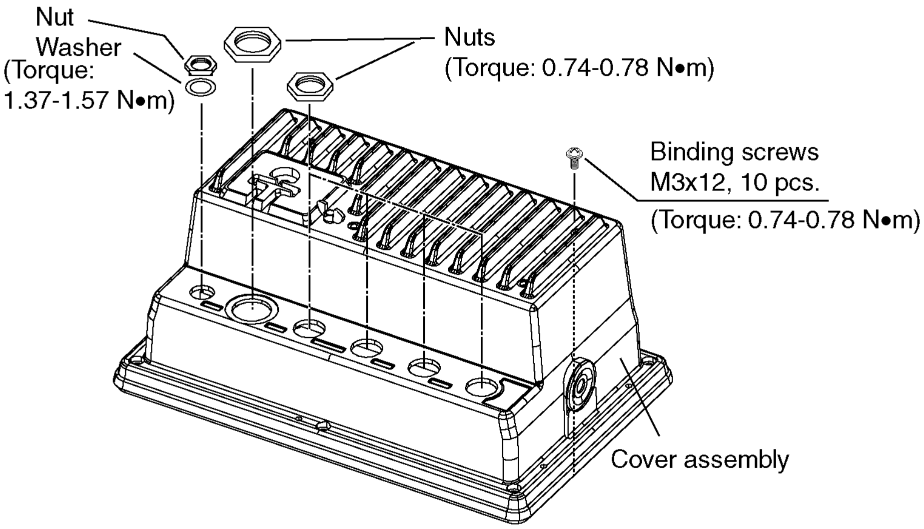

Remounting the cover

Note: When reattaching the cover, confirm the following parts are attached.

- Inside of the cover : Shield gaskets, GN gasket (See the figure below.)
- On ANLG Board : Connector gasket (See the page 4-2.)

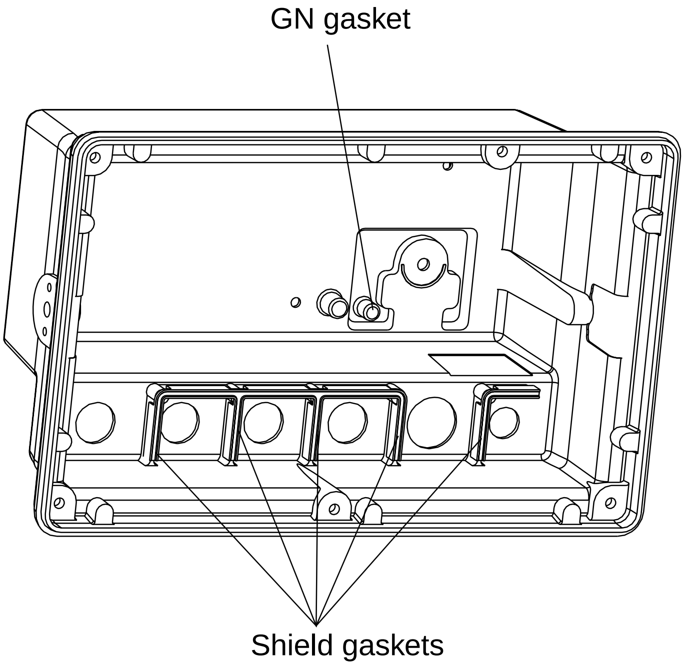

Inside of the cover

Checking the beacon receiver

1. Press the [MENU] key.
2. Press the CONFIGURATION soft key.
3. Press the SYSTEM MENU soft key.
4. Press the SELF TEST soft key.
5. Press the MEMORY•I/O TEST soft key to display the following message.

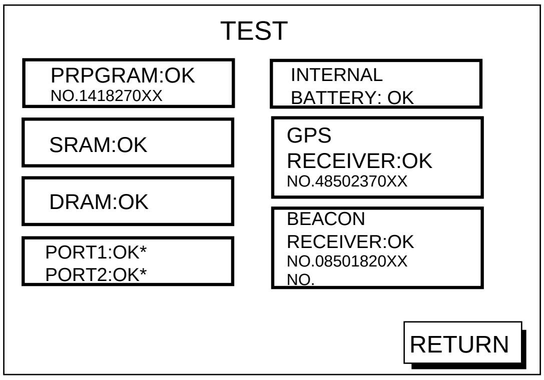

*:Special connections are required to check these port.
Otherwise, "--"(bar) appears.

Memory, I/O Test Display

6. Confirm that BEACON RECEIVER: OK is displayed.
7. Press the RETURN soft key.
8. Press the [PLOT] key to return the plotter display.

This page is intentionally left blank.

PACKING LIST GP-1850WF (E017)

NAME	OUTLINE	DESCRIPTION/CODE No.	Q'TY
ユニット UNIT			
指示器 DISPLAY UNIT	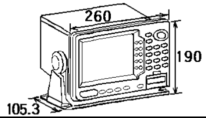	GP-1850WF-E 000-041-815	1
空中線部 ANTENNA UNIT	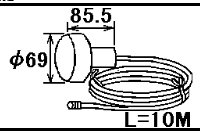	GPA-017 000-041-403	1
予備品 SPARE PARTS		**SP14-02501**	
ﾋｭｰｽﾞ FUSE	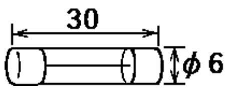	FGBO-A 5A AC125V 000-549-064	3
付属品 ACCESSORIES		**FP14-02401**	
ﾊｰﾄﾞｶﾊﾞｰ組品 HARD COVER ASSY.	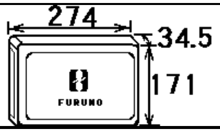	FP14-02401 004-375-270	1
付属品 ACCESSORIES		**FP14-02402**	
出力ﾊﾘﾏｰｸ(E) OUT PUT MARK LABEL(E)	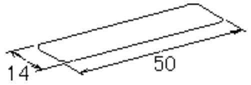	14-063-1025-1 100-274-611	1
+ﾅﾍﾞｾﾑｽﾈｼﾞB WASHER HEAD SCREW	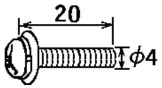	M4X20 SUS304 000-804-742	6
+ﾄﾗｽﾀｯﾋﾟﾝﾈｼﾞ +TAPPING SCREW	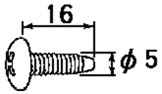	5X16 SUS304 1種 000-805-494	4

NAME	OUTLINE	DESCRIPTION/CODE No.	Q'TY
ｺﾞﾑｱｼ RUBBER FOOT	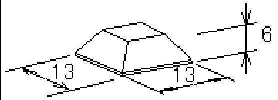	TM-166 No.18 ｸﾛ 000-808-732	2
その他工材 OTHER INSTALLATION MATERIALS			
ｹｰﾌﾞﾙ組品MJ CABLE ASSY.		MJ-A6SPF0003-050 000-117-603	1
ｹｰﾌﾞﾙ組品MJ CABLE ASSY.	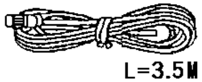	MJ-A3SPF0013-035 000-129-613	1

(略図の寸法は、参考値です。 DIMENSIONS IN DRAWING FOR REFERENCE ONLY.)

PACKING LIST GP-1850WDF (E019)

NAME	OUTLINE	DESCRIPTION/CODE No.	Q'TY
ユニット UNIT			
指示器 DISPLAY UNIT	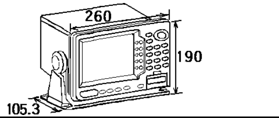	GP-1850WDF-E 000-041-862	1
空中線部 ANTENNA UNIT	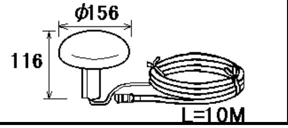	GPA-019 000-142-416	1
予備品 SPARE PARTS		**SP14-02501**	
ﾋｭｰｽﾞ FUSE	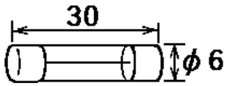	FGBO-A 5A AC125V 000-549-064	3
付属品 ACCESSORIES		**FP14-02401**	
ﾊｰﾄﾞｶﾊﾞｰ組品 HARD COVER ASSY.	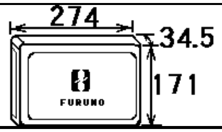	FP14-02401 004-375-270	1
付属品 ACCESSORIES		**FP14-02402**	
出力ﾊﾘﾏｰｸ(E) OUT PUT MARK LABEL(E)	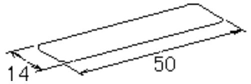	14-063-1025-1 100-274-611	1
+ﾅﾍﾞｾﾑｽﾈｼﾞB WASHER HEAD SCREW	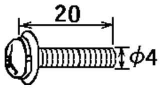	M4X20 SUS304 000-804-742	6
+ﾄﾗｽﾀｯﾋﾟﾝﾈｼﾞ +TAPPING SCREW	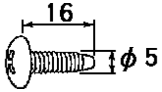	5X16 SUS304 1種 000-805-494	4

NAME	OUTLINE	DESCRIPTION/CODE No.	Q'TY
ｺﾞﾑｱｼ RUBBER FOOT	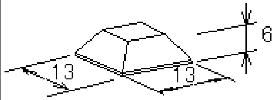	TM-166 No.18 ｸﾛ 000-808-732	2
その他工材 OTHER INSTALLATION MATERIALS			
ｹｰﾌﾞﾙ組品MJ CABLE ASSY.		MJ-A6SPF0003-050 000-117-603	1
ｹｰﾌﾞﾙ組品MJ CABLE ASSY.	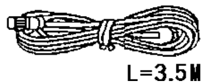	MJ-A3SPF0013-035 000-129-613	1

(略図の寸法は、参考値です。 DIMENSIONS IN DRAWING FOR REFERENCE ONLY.)

C4425-Z06-A

PACKING LIST

14CP-X-9858 -0 1/1

GP-1850WDF(E)

NAME	OUTLINE	DESCRIPTION/CODE No.	Q'TY
ユニット UNIT			
指示器 DISPLAY UNIT	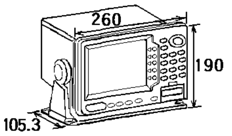	GP-1850WDF-E 000-041-862	1
予備品 SPARE PARTS		**SP14-02501**	
ﾋｭｰｽﾞ FUSE	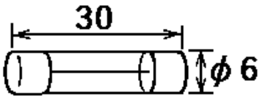	FGBO-A 5A AC125V 000-549-064	3
付属品 ACCESSORIES		**FP14-02401**	
ﾊｰﾄﾞｶﾊﾞｰ組品 HARD COVER ASSY.	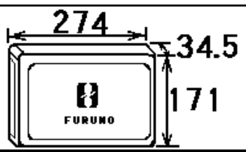	FP14-02401 004-375-270	1
付属品 ACCESSORIES		**FP14-02402**	
出力ﾊﾘﾏｰｸ(E) OUT PUT MARK LABEL(E)	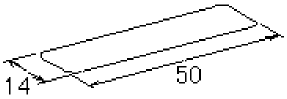	14-063-1025-1 100-274-611	1
+ﾅﾍﾞｾﾑｽﾈｼﾞB WASHER HEAD SCREW	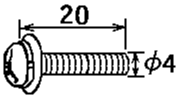	M4X20 SUS304 000-804-742	6
+ﾄﾗｽﾀｯﾋﾟﾝﾈｼﾞ +TAPPING SCREW	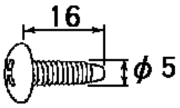	5X16 SUS304 1種 000-805-494	4
ｺﾞﾑｱｼ RUBBER FOOT	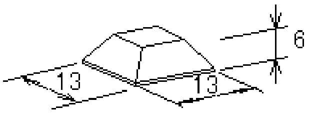	TM-166 No.18 ｸﾛ 000-808-732	2
その他工材 OTHER INSTALLATION MATERIALS			
ｹｰﾌﾞﾙ組品MJ CABLE ASSY.	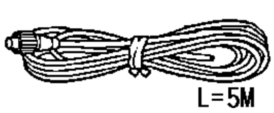	MJ-A6SPF0003-050 000-117-603	1
ｹｰﾌﾞﾙ組品MJ CABLE ASSY.	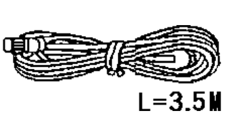	MJ-A3SPF0013-035 000-129-613	1

(略図の寸法は、参考値です。 DIMENSIONS IN DRAWING FOR REFERENCE ONLY.)

FURUNO

CODE NO.		20AG-X-9404 -1
TYPE		1/1

工事材料表

INSTALLATION MATERIALS

GP-80,GP-90,SC-55,GP-3500/F
GP-1850,GP-1650,FA-100,GP-1640/F
SC-60/120,GD/GP-280/680/380

番号 NO.	名称 NAME	略図 OUTLINE	型名／規格 DESCRIPTIONS		数量 Q'TY	用途／備考 REMARKS
1	ｱﾝﾃﾅｹｰﾌﾞﾙ組品 ANTENNA CABLE ASSY.	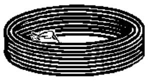 L=30M	8D-FB-CV *30M*		1	選択 TO BE SELECTED
			CODE NO.	000-111-547		
2	ｹｰﾌﾞﾙ組品 CABLE ASSY.	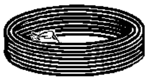 L=50M	8D-FB-CV *50M*		1	選択 TO BE SELECTED
			CODE NO.	000-117-599		

（略図の寸法は、参考値です。 DIMENSIONS IN DRAWING FOR REFERENCE ONLY.）

FURUNO

CODE NO.	004-372-420	20AG-X-9405 -1
TYPE	CP20-01701	1/1

工事材料表
INSTALLATION MATERIALS

番 号 NO.	名 称 NAME	略 図 OUTLINE	型名／規格 DESCRIPTIONS	数量 Q'TY	用途／備考 REMARKS
1	変換ｹｰﾌﾞﾙ組品 CONVERT CABLE ASSY.	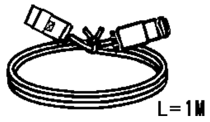	NJ-TP-3DXV-1 CODE NO. 000-123-809	2	
2	ﾋﾞﾆｰﾙﾃｰﾌﾟ VINYL TAPE	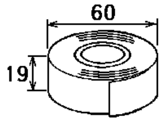	NO360 02X19X10000 ｸﾛ ｴｽﾛﾝ CODE NO. 000-835-215	1	
3	ｺﾈｸﾀ(N) CONNECTOR	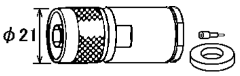	N-P-8DFB CODE NO. 000-111-549	1	
4	絶縁ﾃｰﾌﾟ SELF-BONDING TAPE	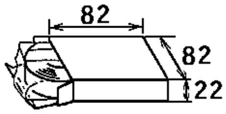	Uﾃｰﾌﾟ 0.5X19X5M CODE NO. 000-800-985	1	

FURUNO ELECTRIC CO ., LTD.

（略図の寸法は、参考値です。 DIMENSIONS IN DRAWING FOR REFERENCE ONLY.）

FURUNO

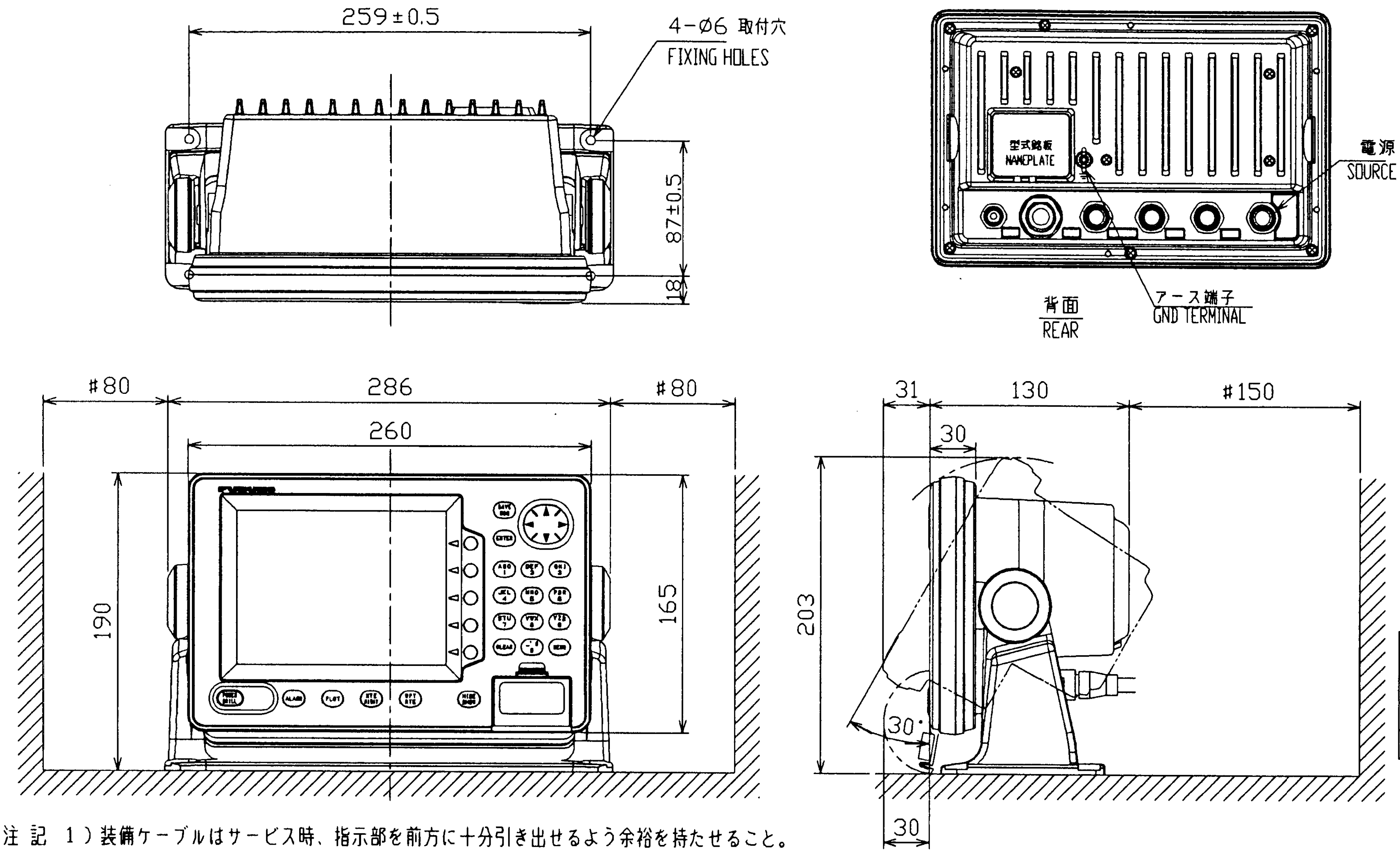

機種名 MODEL	質量 MASS(kg)
GP-1850WF	3.3
GP-1850WDF	3.4

表2 TABLE 2

寸法区分（mm） DIMENSION	公差（mm） TOLERANCE
L≦50	±1.5
50<L≦100	±2.5
100<L≦500	±3

表1 TABLE 1

注記
1）装備ケーブルはサービス時、指示部を前方に十分引き出せるよう余裕を持たせること。
2）取付用ネジはトラスタッピングネジ呼び径5×20を使用のこと。
3）指定外寸法公差は、表1による。
4）#印寸法は最小サービス空間とする。

NOTE
1. KEEP SUFFICIENT CABLE LENGTH BEHIND UNIT.
2. USE TAPPING SCREWS 5x20 FOR FIXING THE UNIT.
3. TABLE 1 INDICATES TOLERANCE OF DIMENSIONS.
4. #: RECOMMENDED SERVICE CLEARANCE.

DRAWN	July 9 '02 T.YAMASAKI	TITLE	GP-1850WF/1850WDF
CHECKED	July 9 '02 Y.Ki...	名称	指示器
APPROVED	July 9 '02 Y.Ki... GP-1850WF/1850WDF		外寸図
SCALE 1/4	MASS 表2 TABLE 2 kg	NAME	DISPLAY UNIT
DWG No.	C4425-G03-A 14-062-120G-0		OUTLINE DRAWING

FURUNO ELECTRIC CO., LTD.

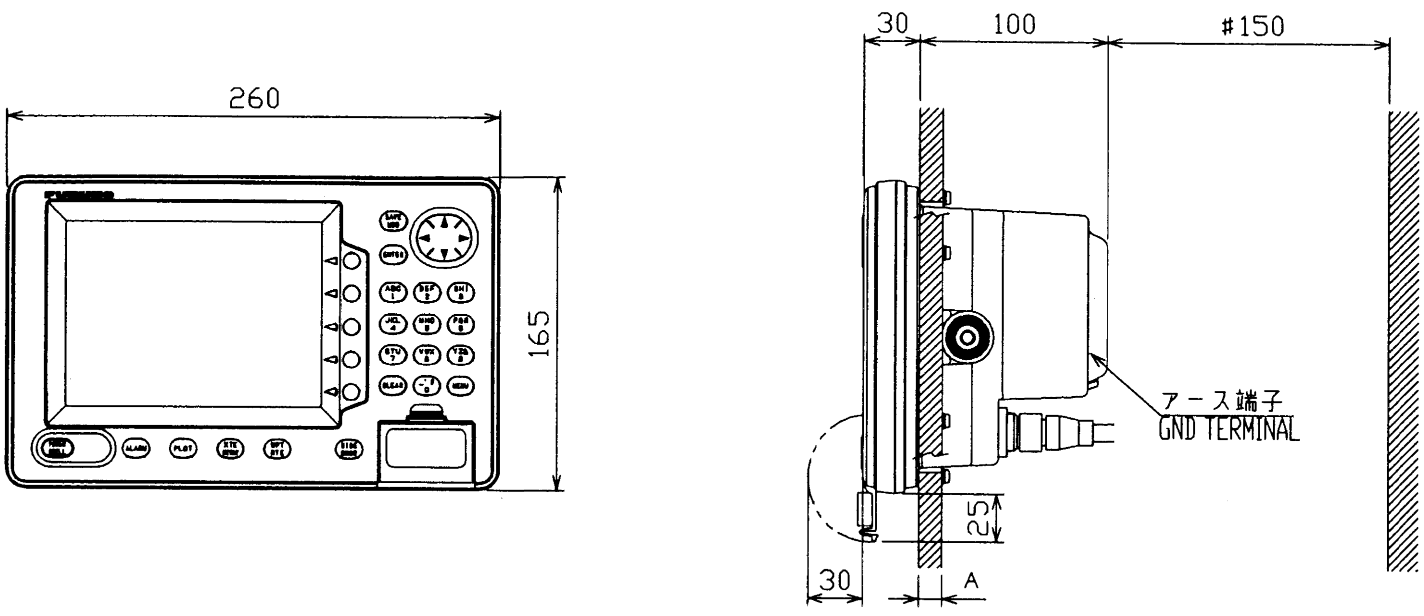

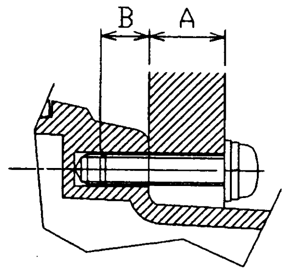

取付ネジ部断面
（尺度１／１）
DETAIL FOR FASTENING (SCALE 1/1)

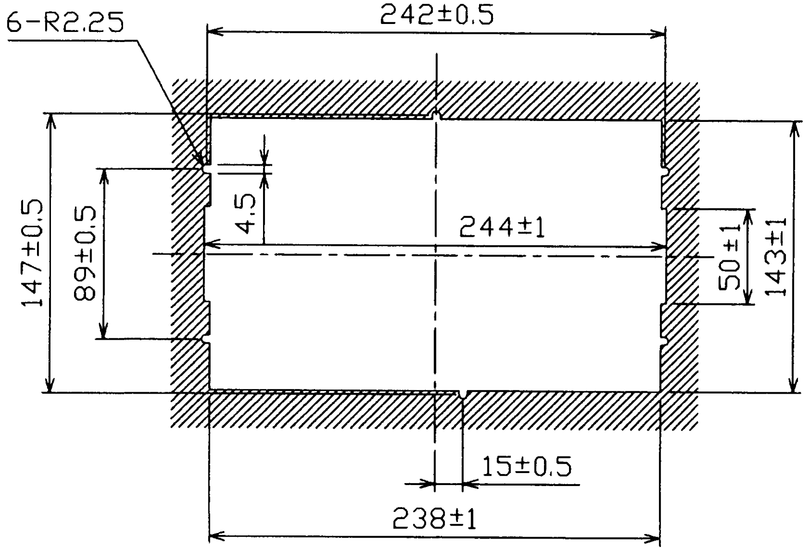

取付穴寸法図
CUTOUT DIMENSIONS

注 記
1） 指定外寸法公差は表１による。
2） ＃印寸法は最小サービス空間とする。
3） 取付用ネジは、セムスネジＢ Ｍ４×２０を使用のこと。
壁の厚さ（Ａ）は １１≦Ａ≦１４とする。それ以外の壁に装備する場合、使用するネジ長さは（Ａ＋７．３）±１．５とする。
筐体にはネジ部を７ｍｍ以上いれないこと。

NOTE
1. TABLE 1 INDICATES TOLERANCE OF DIMENSIONS.
2. #: RECOMMENDED SERVICE CLEARANCE.
3. USE SEMS SCREWS M4x20 FOR FIXING THE UNIT.
THICKNESS A: 11≦A≦14 OR SCREW LENGTH: (A+7.3)±1.5.
DO NOT FASTEN SCREWS INTO UNIT MORE THAN 7 mm.

機種名 MODEL	質量 MASS(kg)
GP-1850W	2.7
GP-1850WD	2.9
GP-1850WF	3.0
GP-1850WDF	3.1

表２ TABLE 2

寸法区分（ｍｍ） DIMENSION	公差（ｍｍ） TOLERANCE
Ｌ≦５０	±１．５
５０＜Ｌ≦１００	±２．５
１００＜Ｌ≦５００	±３

表１ TABLE 1

DRAWN	Aug. 29 '02 T.YAMASAKI	TITLE	GP-1850W/1850WD/1850WF/1850WDF
CHECKED	Aug. 29 '02 Y.Kimi	名称	指示器
APPROVED	Aug. 29 '02 Y.Kimi	GP-1850W SERIES	外寸図
SCALE 1/4	MASS 表2 TABLE 2 kg	NAME	DISPLAY UNIT
DWG No.	C4425-G02-C	14-062-130G-1	OUTLINE DRAWING

FURUNO ELECTRIC CO., LTD.

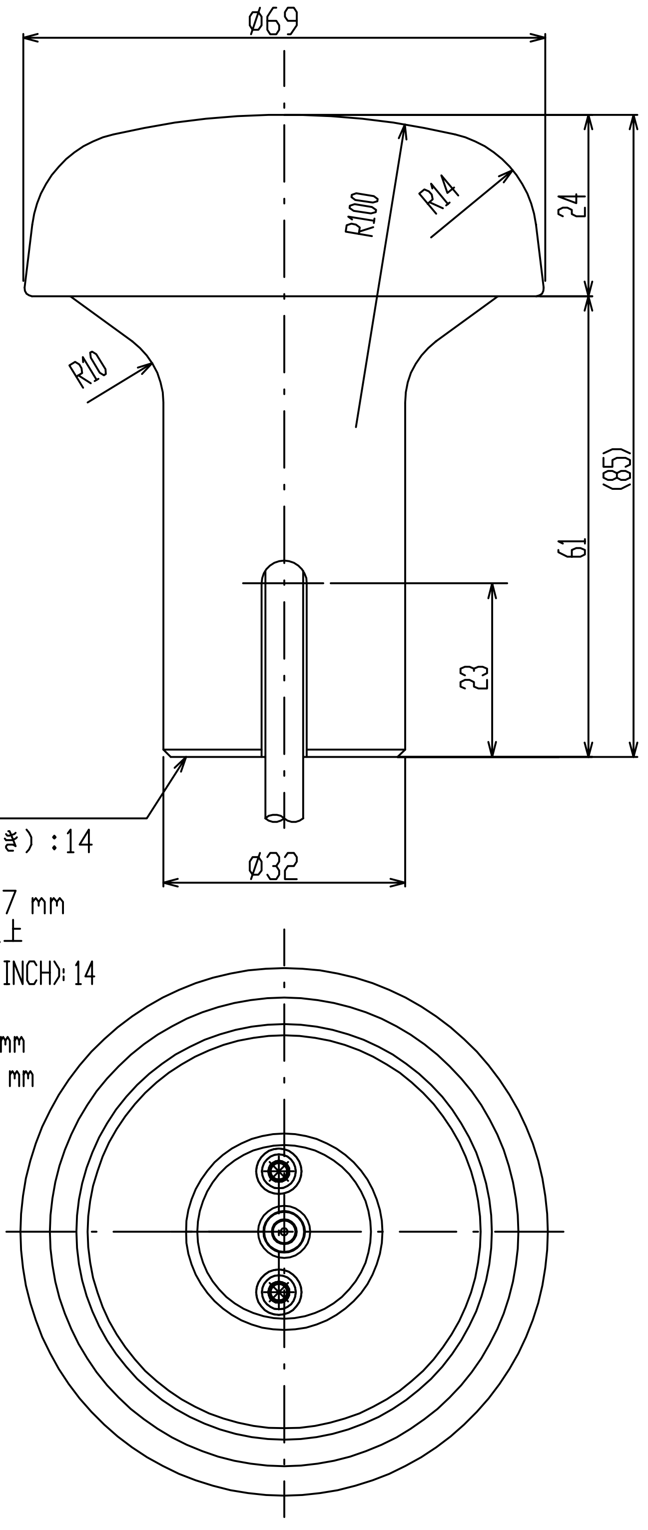

寸法区分(mm) DIMENSION	公差(mm) TOLERANCE
L ≦ 50	±1.5
50 < L ≦ 100	±2.5
100 < L ≦ 500	±3

表1 TABLE 1

1-14UNS1B
ねじ山数（25.4mmにつき）：14
ピッチ： 1.8143 mm
オネジ有効長さ： 24.17 mm
オネジ有効径：19 mm以上

THREAD PER 25.4mm (1 INCH): 14
PITCH: 1.8143 mm
THREAD LENGTH: 15.17 mm
PITCH DIAMETER: 24.17 mm

型式 TYPE	ケーブル長(m) CABLE LENGTH	プラグ PLAG	質量(kg±10%) MASS
GPA-017	10	TNC-P-3	0.6
GPA-017S	0.2	TNC-J-3	0.15

表2 TABLE 2

注記
指定外の寸法公差は表1による。

NOTE
TABLE 1 INDICATES TOLERANCE OF DIMENSIONS.

DRAWN Feb. 19 '03 T.YAMASAKI		TITLE	GPA-017/017S
CHECKED Feb. 19 '03 Y.KIMURA		名称	空中線部
APPROVED Feb. 19, '03 Y. Kimura			外寸図
SCALE 1/1	MASS TABLE 2 表2参照	NAME	ANTENNA UNIT
DWG.No. C4384-G04- J			OUTLINE DRAWING

FURUNO ELECTRIC CO., LTD.

寸法区分(mm) DIMENSION	公差(mm) TOLERANCE
L≦50	±1。5
50<L≦100	±2。5
100<L≦500	±3

表1 TABLE 1

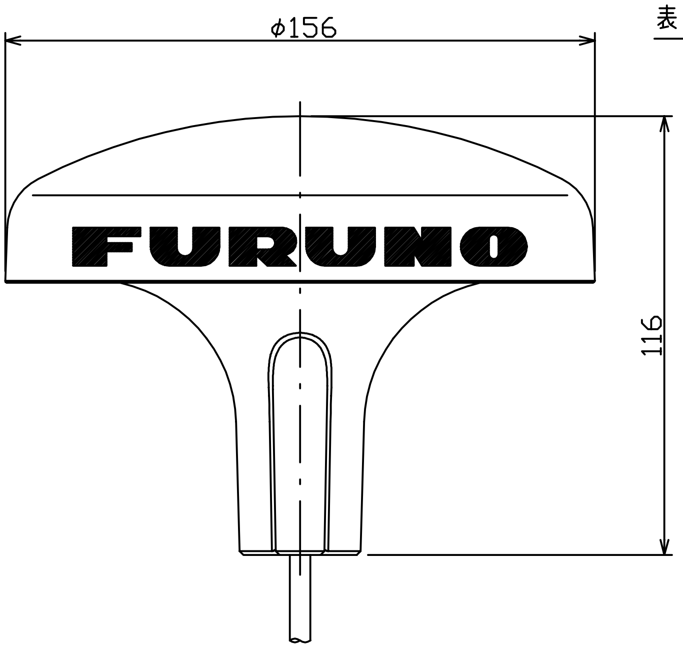

1-14UNS1B

ねじ山数(25.4mmにつき)： 14
ピッチ： 1.8143 mm
オネジ有効長さ： 15.17 mm
オネジ有効径： 24.17 mm

THREAD PER 25.4mm (1 INCH): 14
PITCH: 1.8143 mm
THREAD LENGTH: 15.17 mm
PITCH DIAMETER: 24.17 mm

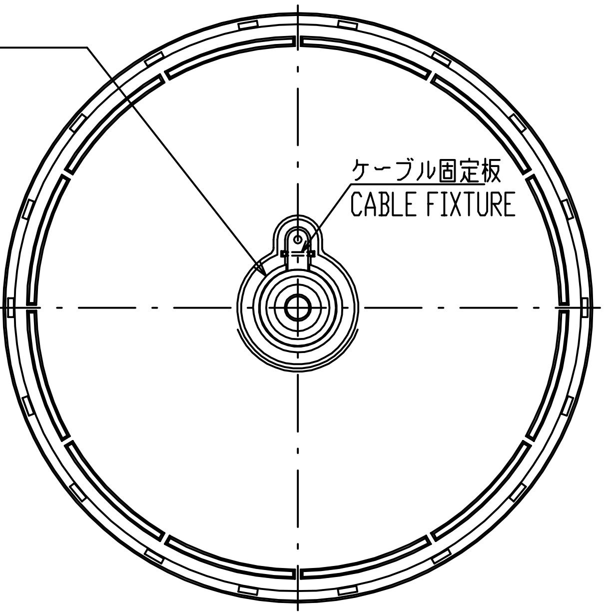

型式 TYPE	ケーブル長(m) CABLE LENGTH	プラグ PLAG	質量 (kg±10%) MASS
GPA-019	10	TNC-P-3	1.0
GPA-019S	0.2	TNC-J-3	0.54

表2 TABLE 2

注記： 指定外の寸法公差は表１による

NOTE: TABLE 1 INDICATES TOLERANCE OF DIMENSIONS.

DRAWN	Feb. 19 '03 T.YAMASAKI	TITLE	GPA-019/019S
CHECKED	Feb. 19 '03 Y.KIMURA	名称	空中線部
APPROVED	Feb. 19, '03 Y. Kimura		外寸図
SCALE 1/2	MASS TABLE 2 表2参照	NAME	ANTENNA UNIT
DWG. No.	C4400-G01- F		OUTLINE DRAWING

FURUNO ELECTRIC CO., LTD.

FURUNO

取付場所
MOUNTING LOCATION

他の機器のアンテナから下の図の距離以上離す。
THIS FIGURE SHOWS THE SEPARATION DESTANCES FROM OTHER ANTENNAS TO AVOID MUTUAL INTERFERENCE.

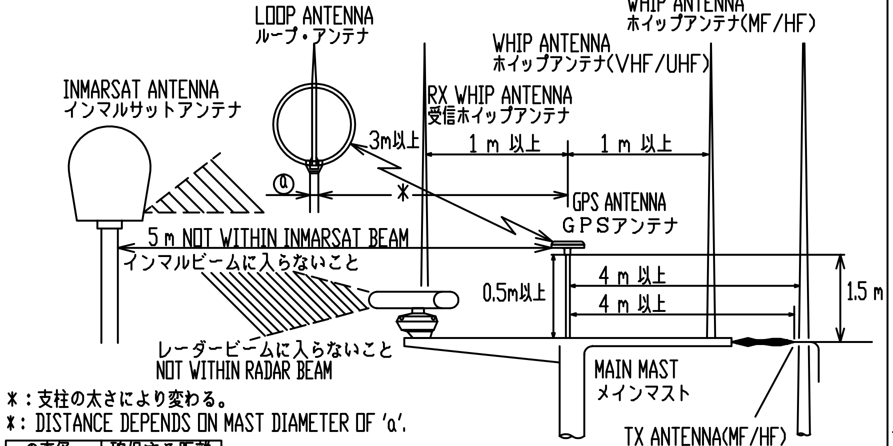

＊：支柱の太さにより変わる。
＊：DISTANCE DEPENDS ON MAST DIAMETER OF 'a'.

aの直径 DIA. OF 'a'	確保する距離 DISTANCE (MIN.)
10 cm	1.5 m
30 cm	3 m

A）マストへの取付け MAST MOUNTING

a)マスト取付金具CP20-01111(工事材料)でマストに固定する。
USE MAST MOUNTING KIT CP20-01111.

b)パイプのみを使うとき
USE A PIPE ONLY.

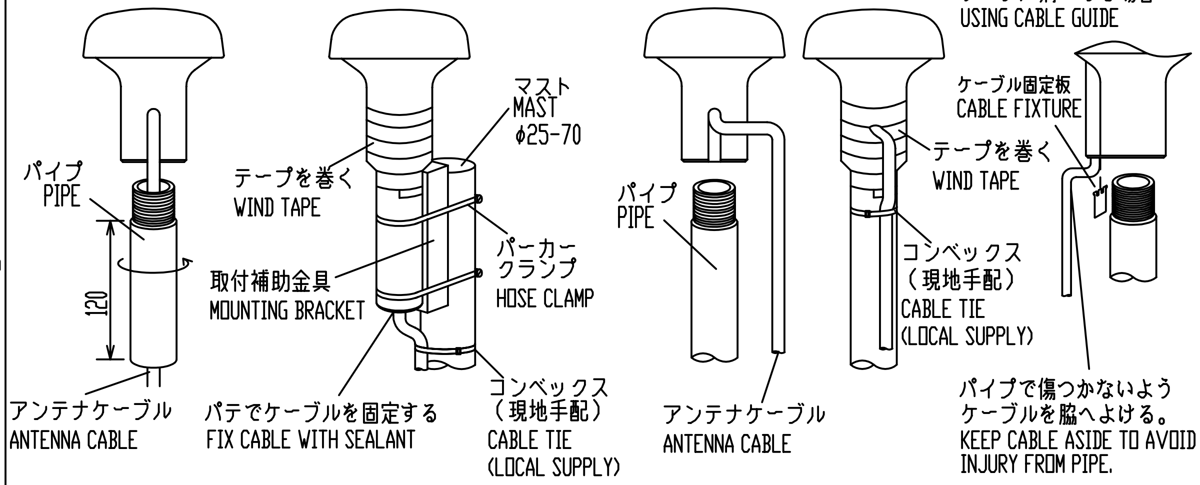

B）スタンションやパルピットにつけるとき

レール用アンテナベース No.13-RC5160
（取付可能レール直径：ø19～ø32）
（コード番号：000-806-114）

HANDRAIL MOUNTING

USE HANDRAIL MOUNTING BASE No.13-RC5160 (CODE No.000-806-114, OPTION).
THE DIAMETER OF THE HANDRAIL MAY BE FROM ø19mm TO ø32mm.

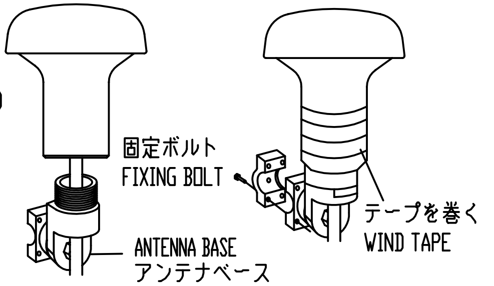

注記 1）パイプやアンテナベースはアンテナユニットにねじ込んだ後に固定する。
2）アンテナを固定するときはパイプ（アンテナベース）をアンテナにねじ込むこと。
アンテナ側をねじるとコネクタ部やケーブルに無理がかかり、故障の原因となる。

NOTE 1. FASTEN PIPE(ANTENNA BASE) TO ANTENNA UNIT FIRST THEN FIX THEM TO MAST OR HANDRAIL.
2. WHEN FIXING ANTENNA, TURN PIPE OR ANTENNA BASE; NOT THE ANTENNA.
TURNING THE ANTENNA MAY TWIST THE CABLE AND PLACE STRESS ON CONNECTOR.

C）取付ける場所が傾斜しているとき ANTENNA BASE MOUNTING

オプションのアンテナベースを使う。
USE OPTIONAL ANTENNA BASE.

傾斜 INCLINATION	-5° - 33°	32° - 65°	65° - 98°
装備方法 MOUNTING METHOD	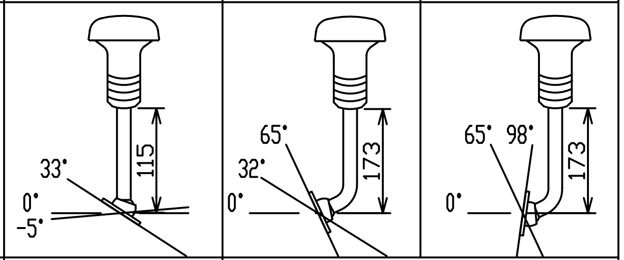		
アンテナベース型式 ANT. BASE TYPE コード番号 CODE No.	直型アンテナベース RIGHT ANGLE ANTENNA BASE No.13-QA330 000-803-239	L型アンテナベース L-TYPE ANTENNA BASE No.13-QA310 000-803-240	

アンテナベース基部
MOUNTING DIMENSIONS OF ANTENNA BASE.

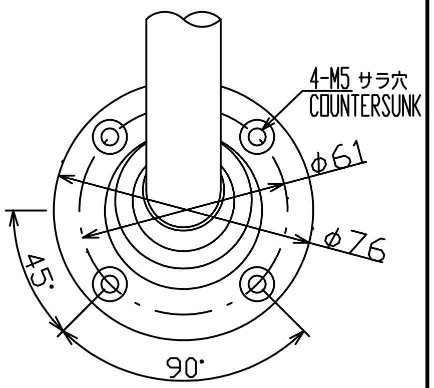

DRAWN	Mar. 9 '05 T.YAMASAKI	TITLE	GPA series
CHECKED	Mar. 9 '05 H.HAYASHI	名称	空中線部
APPROVED	Mar.10 '05 H.Hayashi		装備要領図
SCALE	MASS	NAME	ANTENNA UNIT
DWG.No.	C4384-Y01- C		INSTALLATION PROCEDURE

FURUNO ELECTRIC CO., LTD.

FURUNO

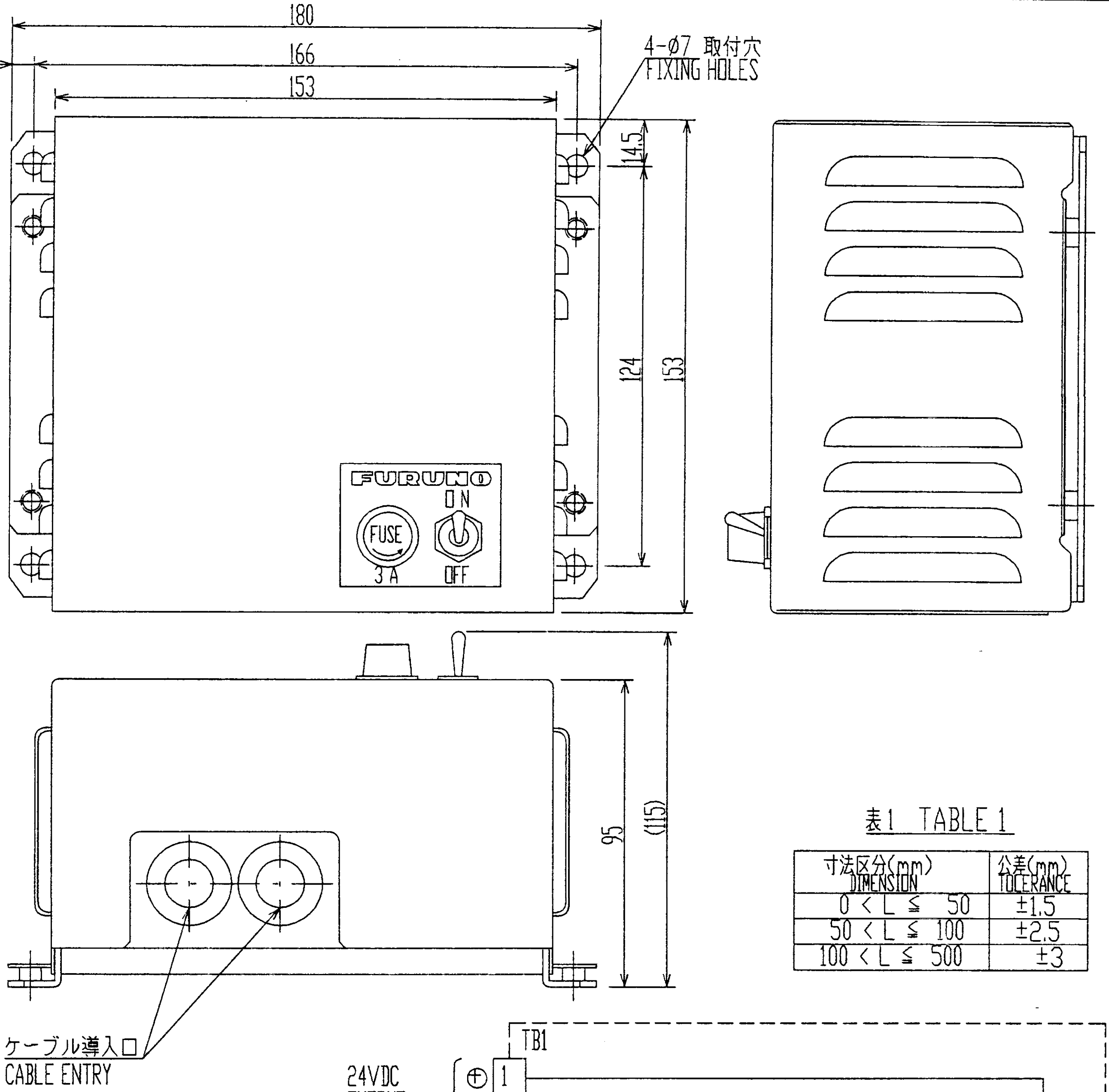

表1 TABLE 1

寸法区分(mm) DIMENSION	公差(mm) TOLERANCE
0 < L ≦ 50	±1.5
50 < L ≦ 100	±2.5
100 < L ≦ 500	±3

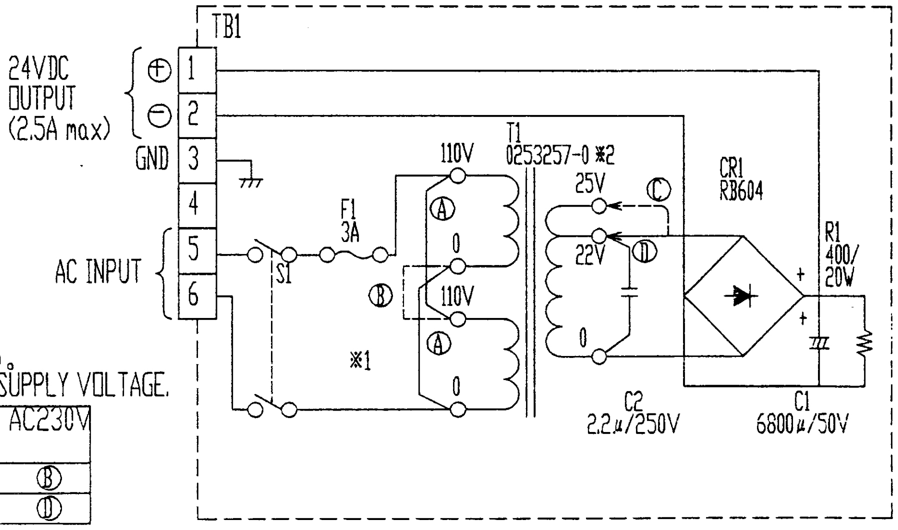

入力電圧に応じて接続を変更して下さい。
CHANGE TAP CONNECTIONS DEPENDING ON SUPPLY VOLTAGE.

	AC100V	AC110/115V	AC220V	AC230V
※1	Ⓐ	Ⓐ	Ⓑ	Ⓑ
※2	Ⓒ	Ⓓ	Ⓓ	Ⓓ

DRAWN Sep. 14 '01 T.YAMASAKI		TITLE	PR-62
CHECKED (signature)		名称	整流器
APPROVED (signature)			外寸図
SCALE 1/2	MASS 3 ±10% kg	NAME	RECTIFIER
DWG.No. C5003-034-E			OUTLINE DRAWING

FURUNO ELECTRIC CO., LTD.

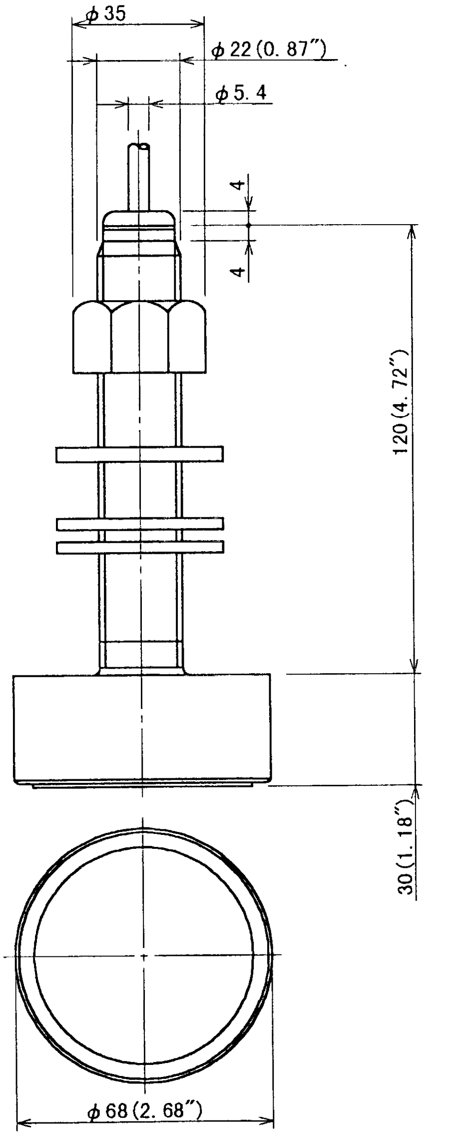

型式 TYPE	コネクタ PLUG
520-5PSC	8P
520-5PSD	10P

DRAWN July 4 '00 T.YAMASAKI			TITLE	520-5PSC/5PSD
CHECKED July 5 '00 Y.Kim			名称	送受波器
APPROVED July 5 '00 Y.Kim				外寸図
SCALE 1/2	MASS 3.4 kg	質量はケーブル重さを含まず MASS W/O CABLE	NAME	TRANSDUCER
DWG. No. C2003-G13- C				OUTLINE DRAWING

FURUNO ELECTRIC CO., LTD.

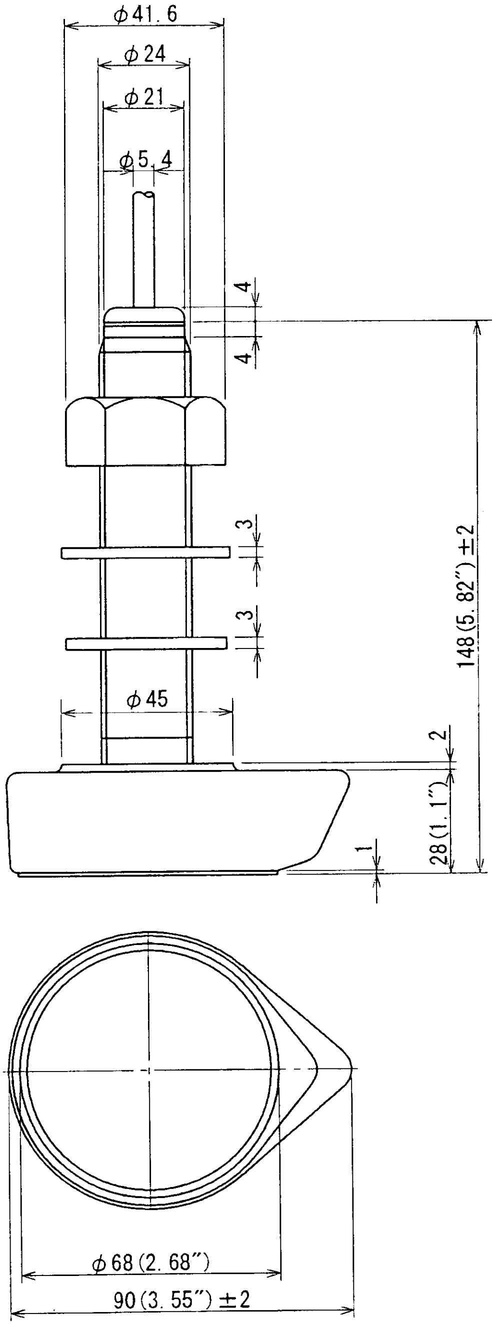

型式 TYPE	コネクタ PLUG
520-5MSC	8P
520-5MSD	10P

DRAWN Nov 27 '00 T.YAMASAKI	TITLE	520-5MSC/5MSD
CHECKED Nov 28 '00 Y.K	名称	送受波器
APPROVED Nov 28 '00 Y.K		外寸図
SCALE 1/2 ; MASS 3.5 kg ±10% 質量はケーブル重さを含まず。 MASS W/O CABLE.	NAME	TRANSDUCER
DWG. No. C2003-G09- E		OUTLINE DRAWING

FURUNO ELECTRIC CO., LTD.

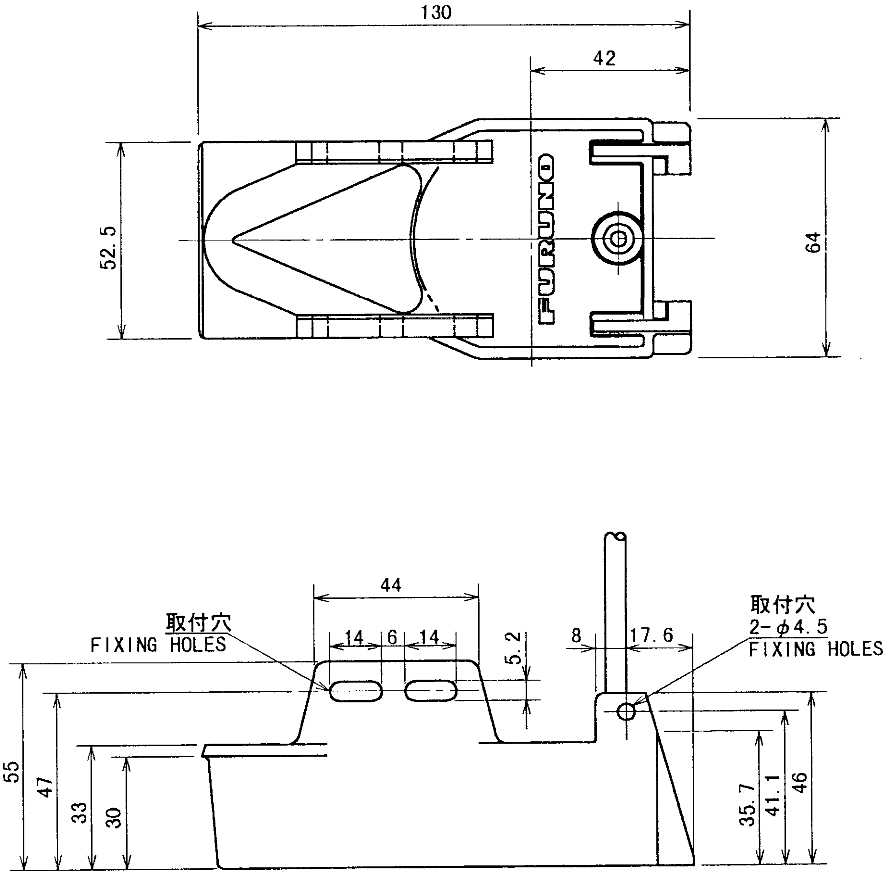

型式 TYPE	コネクタ PLUG
520-5WC	8P
520-5PWD	10P

表1 TABLE 1

寸法区分(mm) DIMENSION	公差(mm) TOLERANCE
0 < L ≦ 50	±1.5
50 < L ≦ 100	±2.5
100 < L ≦ 500	±3

DRAWN July 4 '00 T.YAMASAKI		TITLE	520-5PWD/5PWC
CHECKED July 5 '00 Y.Kimura		名称	送受波器
APPROVED July 5 '00 Y.Kimura			外寸図
SCALE 1/2	MASS ±10% - kg	NAME	TRANSDUCER
DWG. No. C2003-G18- B			OUTLINE DRAWING

FURUNO ELECTRIC CO., LTD.

FURUNO

表1 TABLE 1

寸法区分(mm) DIMENSION	公差(mm) TOLERANCE
0 < L ≦ 50	±1.5
50 < L ≦ 100	±2.5

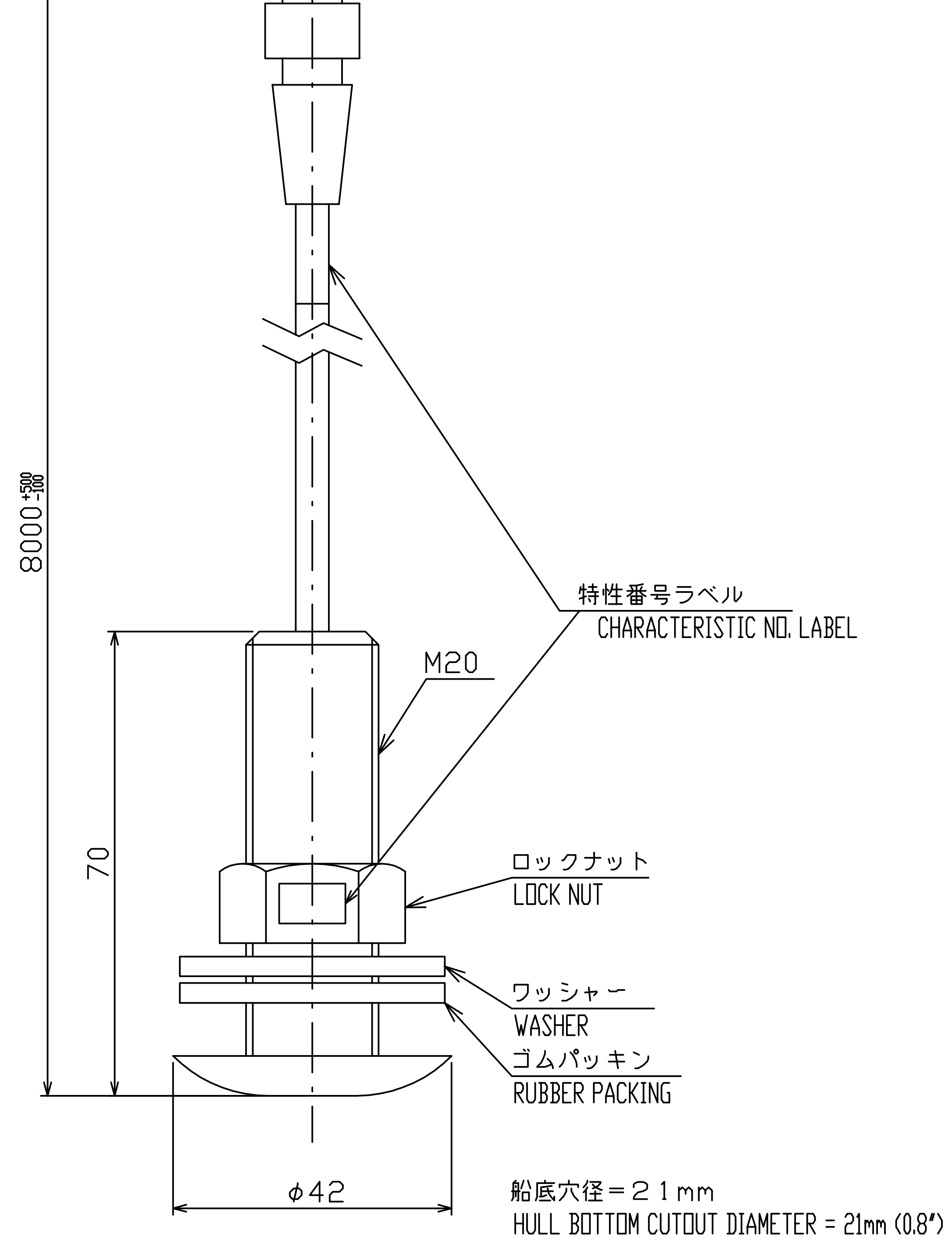

注記
1）指定なき寸法公差は表１による。

NOTE
1. TABLE 1 INDICATES TOLERANCE OF DIMENSIONS.

DRAWN Nov. 14 '02 T.YAMASAKI		TITLE	T-02MSB
CHECKED Nov. 14 '02 Y.KIMURA		名称	水温センサー
APPROVED Nov. 14, '02 Y. Kimura	T-2000		外寸図
SCALE 1/1	MASS 0.5 ±10% kg	NAME	THERMO SENSOR
DWG.No. C4322-007- C			OUTLINE DRAWING

FURUNO ELECTRIC CO., LTD.

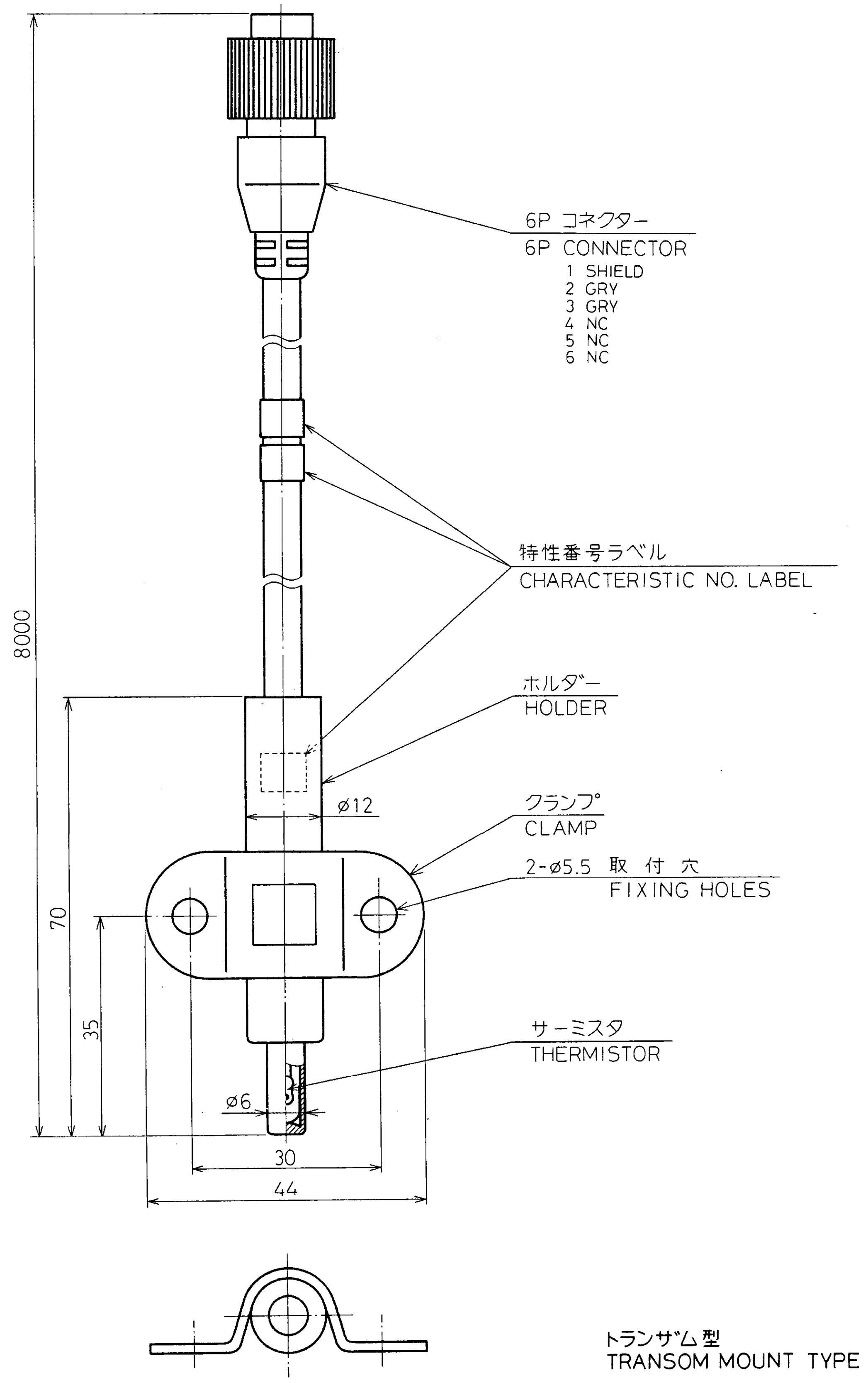

品番 ITEM	品名 NAME	材質 MATERIAL	数量 Q'TY	図番 DWG. NO.	摘要 REMARKS

承認 APPROVED	FEB・28・'89 T. NAKANO	三角法 THIRD ANGLE PROJECTION		名称 TITLE	T-02MTB 水温センサー TEMPERATURE SENSOR
検図 CHECKED	Feb・28・'89 T. KODA	尺度 SCALE	1/1		
製図 DRAWN	Feb・28・'89 T. MIYOSHI	質量 MASS	kg	図番 DWG. NO.	C2317—G01— B

FURUNO ELECTRIC CO., LTD.

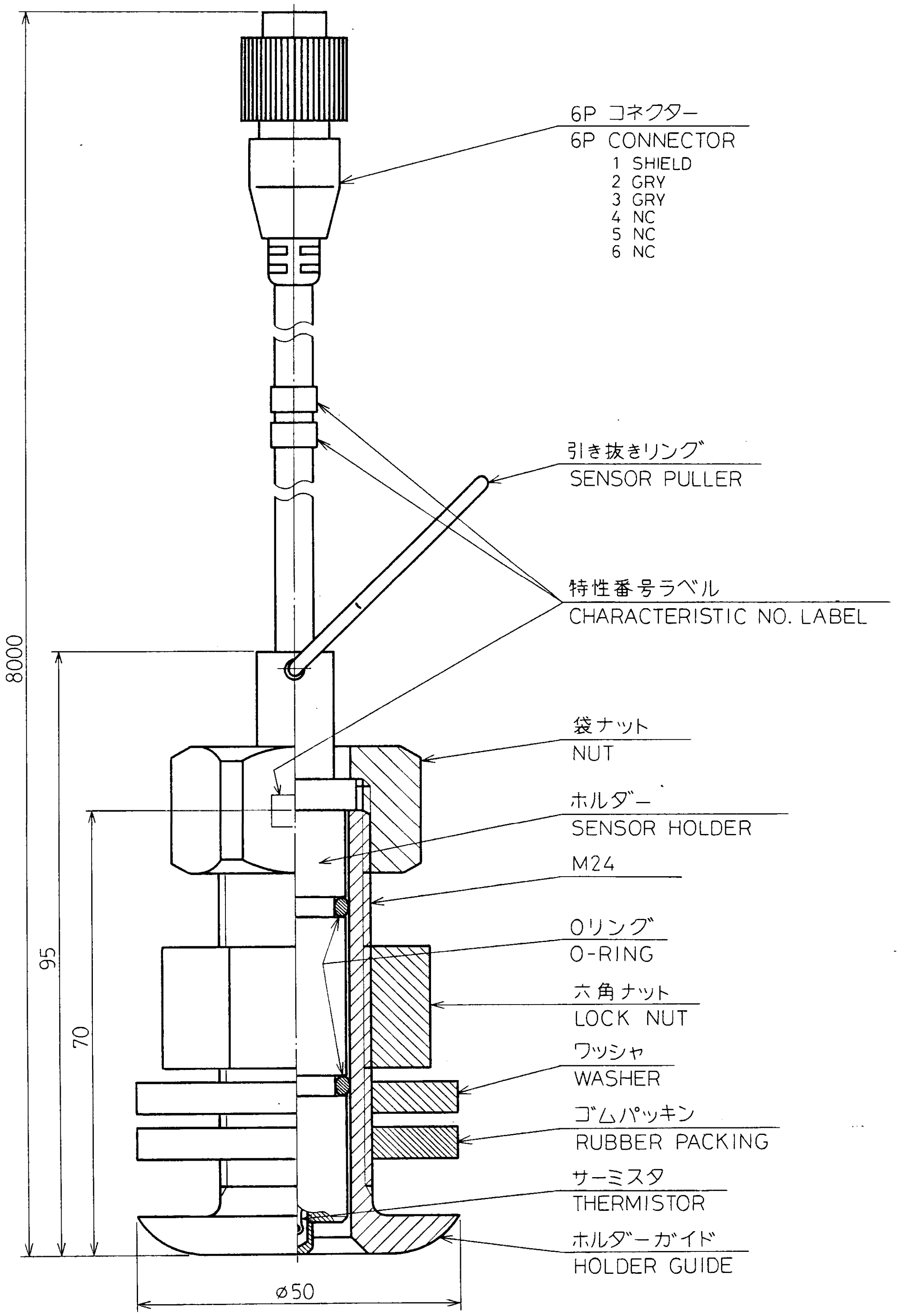

船底貫通型（取り外し可能）
THRU HULL MOUNT

品番 ITEM	品名 NAME	材質 MATERIAL	数量 Q'TY	図番 DWG. NO.	摘要 REMARKS

承認 APPROVED	FEB. 28. '89 T. NAKANO	三角法 THIRD ANGLE PROJECTION		名称 TITLE	T-03MSB 水温センサー TEMPERATURE SENSOR
検図 CHECKED	Feb. 28. '89 T. KODA	尺度 SCALE	1/1		
製図 DRAWN	Feb. 28. '89 T. MIYOSHI	質量 MASS	kg	図番 DWG. NO.	C2317-G02- B

FURUNO ELECTRIC CO., LTD.

FURUNO

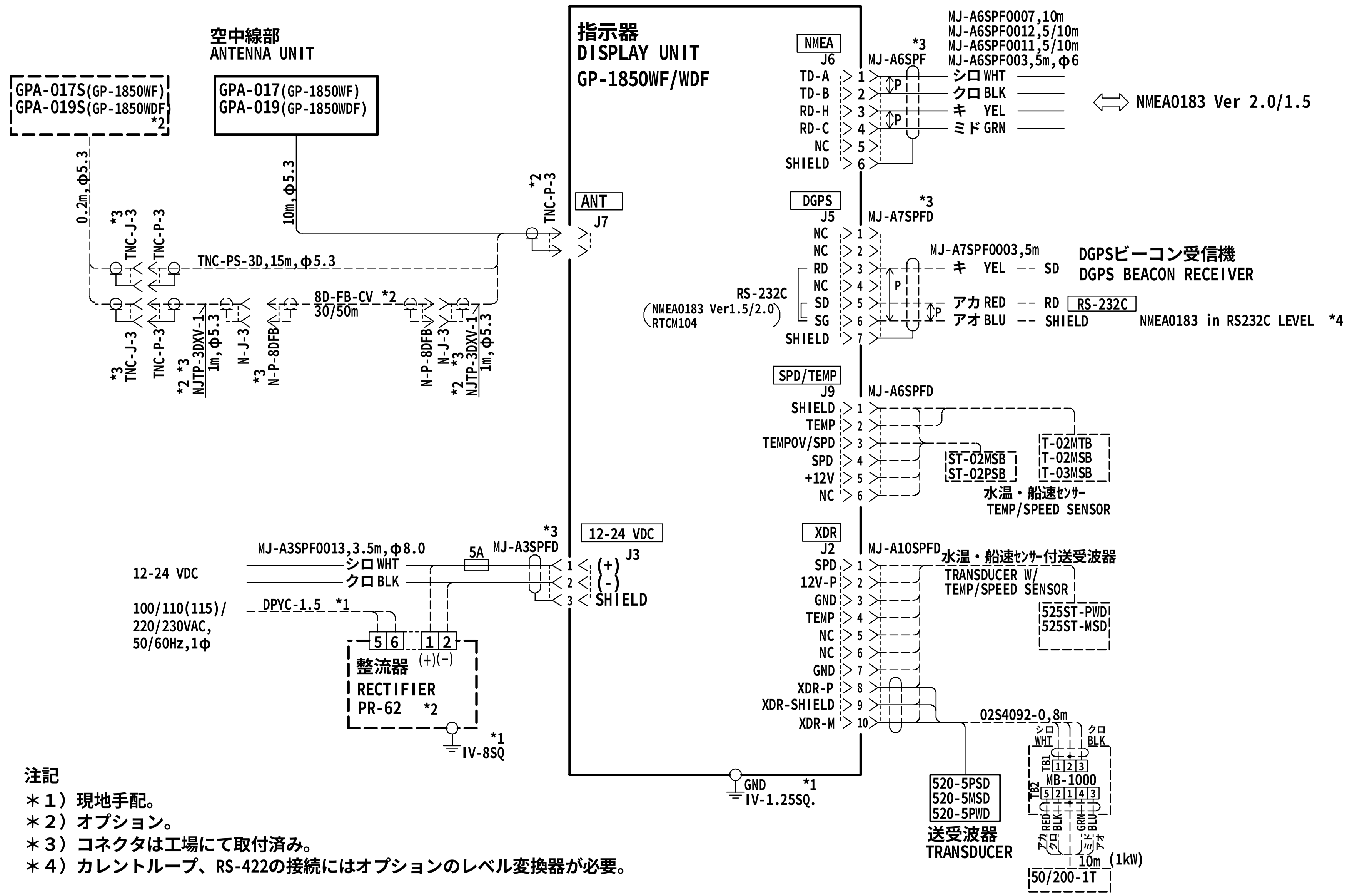

注記
＊1）現地手配。
＊2）オプション。
＊3）コネクタは工場にて取付済み。
＊4）カレントループ、RS-422の接続にはオプションのレベル変換器が必要。

NOTE
*1. LOCAL SUPPLY.
*2. OPTION.
*3. FITTED AT FACTORY.
*4. OPTIONAL LEVEL CONVERTER REQUIRED FOR CURRENT LOOP OR RS422 OUTPUT.

DRAWN	Aug. 24, '04 E. MIYOSHI	TITLE	GP-1850WF/1850WDF
CHECKED	TAKAHASHI. T	名称	GPS/DGPSプロッタ魚探
APPROVED	Y. Hatai		相互結線図
SCALE	MASS kg	NAME	GPS/DGPS PLOTTER/SOUNDER
DWG.No.	C4425-C02- C		INTERCONNECTION DIAGRAM

FURUNO ELECTRIC CO., LTD.